LOT 10
IN OR 1826/507 & OR 1826/509
BRADY POINT PRESERVE PB 7/76

READ JOHN L & CORDELIA ANNE REVOC TRUST/READ JOHN
96192 BRADY POINT RD
FERNANDINA BEACH, FL 32034

2024

38-2N-28-0180-0010-0000

NASSAU COUNTY PROPERTY

BUILDING CHARACTERISTICS

ELEMENT	CD	CONSTRUCTION
Exterior Wall	31	HARDIE BRD 100
Roof Structur	08	IRREGULAR 100
Roof Cover	03	COMP SHNGL 100
Interior Wall	05	DRYWALL 100
Interior Floo	11	CLAY TILE 50
Interior Floo	12	HARDWOOD 50
Air Condition	03	CENTRAL 100
Heating Type	04	AIR DUCTED 100
Bedrooms		3 100
Bathrooms		4 100
Frame	02	WOOD FRAME 100
Stories	2.	2. 100
Units		0 100
Quality	03	Quality Level 03
DOR CODE	0100	SINGLE FAMILY
MAP NUM		MKT AREA 04
NEIGHBORHOOD/LOC	4014.00	

AREA TYPE	TOTAL GROSS AREA	PCT OF BASE	TOT ADJ AREA	SUBAREA MARKET VALUE
BAS	2,644	100	2,644	497,320
FCP	529	25	132	24,828
FOP	124	30	37	6,959
FOP	232	30	70	13,167
FOP	338	30	101	18,997
FOP	336	30	101	18,997
FST	56	55	31	5,831
FST	115	55	63	11,850
FST	184	55	101	18,997
FUS	815	100	815	153,297
TOTALS	5,589		4,129	776,640

MARKET ADJUSTMENTS

TYPE	MDL	EFF. AREA	TOT ADJ PTS	EFF. BASE RATE	REPL. COST NEW	AYB	EYB	ECON	FNCT		NORM	% COND
0500	11	4,129	134.1120	201.17	830,631	2009	2009	0	0	0	6.50	93.50

1 SFR CUST – 100% - 2012 Heated Area: 3459 HX Base Yr 2012

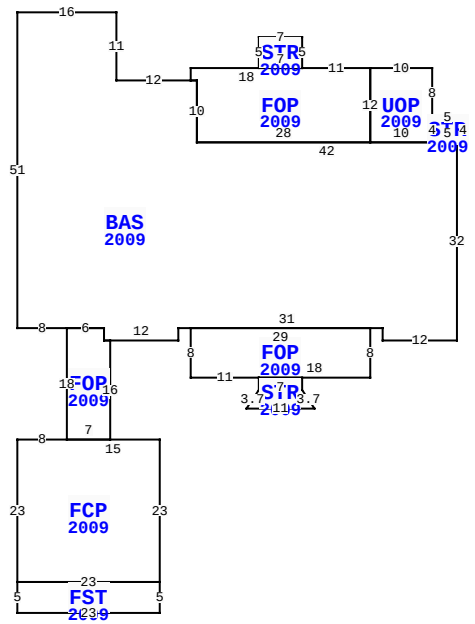

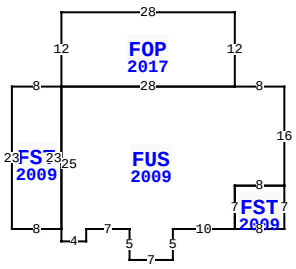

** This building has 14 Sub-Areas

96192 BRADY POINT RD, FERNANDINA BEACH

BLD DATE		LGL DATE	
XF DATE		LAND DATE	03/15/2024 MLU
INC DATE		AG DATE	

NASSAU COUNTY PROPERTY — VALUATION SUMMARY

VALUATION BY		STANDARD
Tax Group: 4	Tax Dist:	
BUILDING MARKET VALUE		776,640
TOTAL MARKET OB/XF VALUE		100,418
TOTAL LAND VALUE - MARKET		390,000
TOTAL MARKET VALUE		1,267,058
SOH/AGL Deduction		761,737
ASSESSED VALUE		505,321
TOTAL EXEMPTION VALUE	HX HB	50,000
BASE TAXABLE VALUE		455,321
TOTAL JUST VALUE		1,267,058
NCON VALUE		0
INCOME VALUE		
PREVIOUS YEAR MKT VALUE		1,119,016

PERMIT NUM	DESCRIPTION	AMT	ISSUED
B230015384	CONV FOP TO COND	246,488	12/01/2023
B1704665	ADDITION	52,000	05/01/2017
C22094	CO ISSUED	0	04/28/2010
M14556	MECH OTHER	0	05/01/2009
R11879	REPAIR/RRF	9,945	05/01/2009
P13687	OTHER	0	03/01/2009

SALES DATA

OFF RECORD Number	DATE	TYPE INST	Q / U	V / I	RSN CD	SALE PRICE
1826/0509	11/06/2012	WD	U	I	30	100
GRANTOR: READ CORDELIA ANNE &						
GRANTEE: READ CORDELIA ANNE						
1826/0507	11/06/2012	WD	U	I	30	100
GRANTOR: READ JOHN LARRY & COR						
GRANTEE: READ JOHN LARRY TRU						

EXTRA FEATURES

L N	OB/XF CODE	DESCRIPTION	BLD	CAP	L	W	UNITS	UT	Adj R	ADJ UNIT PRICE	ORIG COND	YEAR ON	YEAR ACTUAL	Q	% COND	OB/XF MKT VALUE	NOTES
1	0500	FP-PRE FAB	0	100	0	0	1.00	UT	3,500.00	3,500.00	100	2009	2009	3	93	3,255	
2	1242	WD DECK A	0	100	15	7	105.00	SF	10.00	10.00	100	2009	2009	3	40	420	
3	1242	WD DECK A	0	100	10	4	40.00	SF	10.00	10.00	100	2009	2009	3	40	160	
4	0855	CONC PAVER	0	100	0	0	3,886.00	SF	7.00	7.00	100	2009	2009	3	90	24,482	
5	0300	BOAT DCK W	0	100	0	0	1,760.00	SF	40.00	40.00	100	2022	2022	3	98	68,992	
6	0303	FLT DOCK W	0	100	0	0	122.00	SF	26.00	26.00	100	2022	2022	3	98	3,109	

BUILDING NOTES

BUILDING DIMENSIONS

STR=[YR=2009] W5 UOP=[YR=2009] N8 W10 FOP=[YR=2009] W11 STR=[YR=2009] N5 W7 S5 E7 $ W18 S2 BAS=[YR=2009] W12 N11 W16 S51 E8 FOP=[YR=2009] S18 FCP=[YR=2009] W8 S23 FST=[YR=2009] S5 E23 N5 W23 $ E23 N23 W15 $ E7 N16 W1 N2 W6 $ E6 S2 E12 N2 E2 FOP=[YR=2009] S8 E11 STR=[YR=2009] S2 D3 L2 E11 U3 L2 N2 W7 $ E18 N8 W29 $ E31 S2 E12 N32 W42 N10 W1 $ E1 S10 E28 N12 $ S12 E10 N4 $ S4 E5 N4 $ PTR= E30 FST=[YR=2009] E8 FOP=[YR=2017] N12 E28 S12 FUS=[YR=2009] E8 S16 FST=[YR=2009] S7 W8 N7 E8 $ W8 S7 W10 S5 W7 N5 W7 S2 W4 N25 E28 $ W28 $ S23 W8 N23 $ W30 $.

LAND DESCRIPTION

TOTAL OB/XF 100,418

L N	USE CODE	CLS	LAND USE DESCRIPTION	CAP	R D	LOC ZONE	FRONT	DEPTH	TOT LND UTS	UNIT TYPE	D T	DPTH FACT	% COND	TOT ADJ	UNIT PRICE	ADJ UNIT PRICE	LAND VALUE	OTHER ADJUSTMENTS AND NOTES	YEAR	DENSITY	DECL	FRZ	YR	CONSRV
1	000116	C	SFR MARSH	100		RSF-1	0.00	0.00	1.00	LT		1.00	1.00	1.00	390,000.00	390,000.00	390,000							

REVIEW DATE 08/10/2022 BY DJ Total Acres: 0.00 Total Land Value: 390,000 Market: 0 Agricultural: 0 Common: 390,000 PRINTED 08/06/2024 BY SYS