LOT 130
MEADOWFIELD #3 PB 6/321-323

WEIGLE RICHARD &/BULLOCK CLARISSA
86811 RIVERWOOD DR
YULEE, FL 32097

2024

38-2N-27-1332-0130-0000

BUILDING CHARACTERISTICS

ELEMENT	CD	CONSTRUCTION
Exterior Wall	16	WD FR STUC 100
Roof Structur	08	IRREGULAR 100
Roof Cover	03	COMP SHNGL 100
Interior Wall	05	DRYWALL 100
Interior Floo	14	CARPET 60
Interior Floo	11	CLAY TILE 40
Air Condition	03	CENTRAL 100
Heating Type	04	AIR DUCTED 100
Bedrooms		5 100
Bathrooms		3.5 100
Frame	02	WOOD FRAME 100
Stories	2.	2. 100
Units		0 100
Occupancy	00	NONE 100
Quality	01	Quality Level 01
DOR CODE	0100	SINGLE FAMILY
MAP NUM		MKT AREA 04
NEIGHBORHOOD/LOC	4045.00	

AREA TYPE	TOTAL GROSS AREA	PCT OF BASE	TOT ADJ AREA	SUBAREA MARKET VALUE
BAS	1,272	100	1,272	139,215
FGR	524	55	288	31,521
FOP	120	30	36	3,940
FOP	180	30	54	5,910
FUS	1,584	100	1,584	173,362
TOTALS	3,680		3,234	353,947

MARKET ADJUSTMENTS

TYPE	MDL	EFF. AREA	TOT ADJ PTS	EFF. BASE RATE	REPL. COST NEW	AYB	EYB	ECON	FNCT		NORM	% COND
0900	01	3,234	96.2136	120.27	388,953	2005	2005	0	0	0	9.00	91.00

1 SNGL FAM – 0% - 0 Heated Area: 2856 HX Base Yr

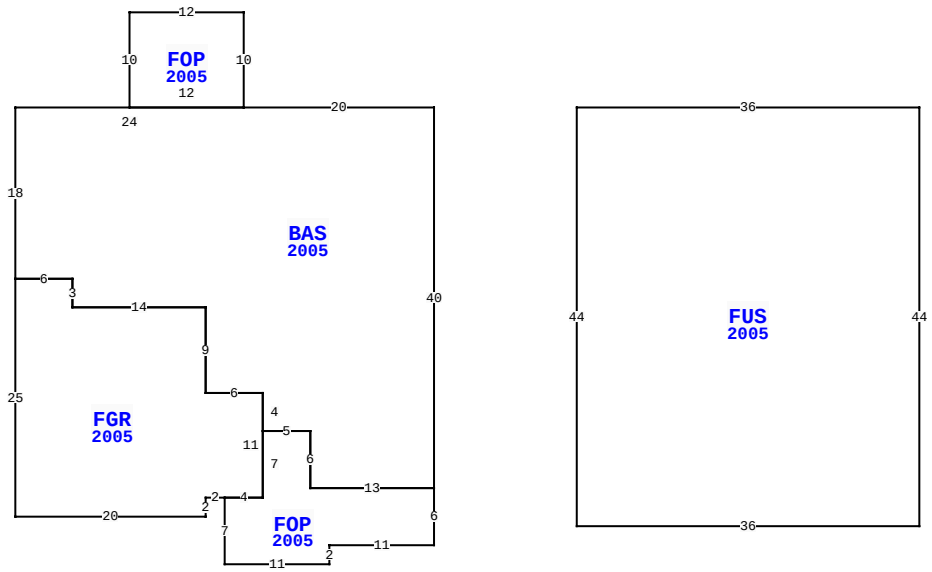

BLD DATE	03/03/2023	NW	LGL DATE
XF DATE			LAND DATE
INC DATE			AG DATE

86811 RIVERWOOD DR, YULEE

NASSAU COUNTY PROPERTY

PAGE 1 of 1 4

VALUATION SUMMARY

VALUATION BY	STANDARD
Tax Group: 4	Tax Dist:
BUILDING MARKET VALUE	353,947
TOTAL MARKET OB/XF VALUE	3,336
TOTAL LAND VALUE - MARKET	65,000
TOTAL MARKET VALUE	422,283
SOH/AGL Deduction	52,492
ASSESSED VALUE	369,791
TOTAL EXEMPTION VALUE	0
BASE TAXABLE VALUE	369,791
TOTAL JUST VALUE	422,283
NCON VALUE	0
INCOME VALUE	
PREVIOUS YEAR MKT VALUE	425,243

PERMIT NUM	DESCRIPTION	AMT	ISSUED
E15676	ELEC OTHER	2,000	09/01/2005
M10150	MECH OTHER	0	08/01/2005
E15343	ELEC OTHER	0	07/01/2005
R07833	REPAIR/RRF	4,030	07/01/2005
B15514	NEW CONSTR	246,023	07/01/2005
P09768	OTHER	0	07/01/2005

SALES DATA

OFF RECORD Number	DATE	TYPE INST	Q U /	V I /	RSN CD	SALE PRICE
2322/0387	11/25/2019	WD	Q	I	01	279,000
GRANTOR: LEY MICHAEL P & BREND						
GRANTEE: WEIGLE RICHARD & CL						
1377/1618	12/30/2005	WD	Q	I		312,100
GRANTOR: PROVIDENCE CONSTRUCTI						
GRANTEE: LEY MICHAEL P & BRE						

BUILDING NOTES

BUILDING DIMENSIONS

BAS=[YR=2005] W20 FOP=[YR=2005] N10 W12 S10 E12$ W24 S18 FGR=[YR=2005] S25 E20 N2 E2 FOP=[YR=2005] S7 E11 N2 E11 N6 W13 N6 W5 S7 W4$ E4 N11 W6 N9 W14 N3 W6$ E6 S3 E14 S9 E6 S4 E5 S6 E13 N40$ PTR=E15 FUS=[YR=2005] E36 S44 W36 N44$ W15$.

EXTRA FEATURES

LN	OB/XF CODE	DESCRIPTION	BLD	CAP	L	W	UNITS	UT	Adj R	ADJ UNIT PRICE	ORIG COND	YEAR ON	YEAR ACTUAL	Q	% COND	OB/XF MKT VALUE	NOTES
1	0811	CONCRETE B	0	0	0	0	746.00	SF	5.20	5.20	100	2005	2005	3	86	3,336	

LAND DESCRIPTION

TOTAL OB/XF 3,336

LN	USE CODE	CLS	LAND USE DESCRIPTION	CAP	RD	LOC ZONE	FRONT	DEPTH	TOT LND UTS	UNIT TYPE	DT	DPTH FACT	% COND	TOT ADJ	UNIT PRICE	ADJ UNIT PRICE	LAND VALUE	OTHER ADJUSTMENTS AND NOTES	YEAR	DENSITY	DECL	FRZ	YR	CONSRV
1	000134	C	SFR POND	0		RSF-1	0.00	0.00	1.00	LT		1.00	1.00	1.00	65,000.00	65,000.00	65,000							

REVIEW DATE 05/12/2019 BY KBA Total Acres: 0.00 Total Land Value: 65,000 Market: 0 Agricultural: 0 Common: 65,000 PRINTED 08/06/2024 BY SYS