LOT 107
IN OR 2199/1119
MEADOWFIELD #3 PB 6/321-323

DAYOUB OSCAR JR & LIZETTE
86088 MEADOWRIDGE COURT
YULEE, FL 32097

2024

38-2N-27-1332-0107-0000

NASSAU COUNTY PROPERTY

BUILDING CHARACTERISTICS

ELEMENT	CD	CONSTRUCTION
Exterior Wall	10	ABOVE AVG 70
Exterior Wall	16	WD FR STUC 30
Roof Structur	03	GABLE/HIP 100
Roof Cover	03	COMP SHNGL 100
Interior Wall	05	DRYWALL 100
Interior Floo	14	CARPET 70
Interior Floo	08	SHT VINYL 30
Air Condition	03	CENTRAL 100
Heating Type	04	AIR DUCTED 100
Bedrooms		4 100
Bathrooms		3 100
Frame	02	WOOD FRAME 100
Stories	1.5	1.5 100
Units		0 100
Occupancy	00	NONE 100
Quality	01	Quality Level 01
DOR CODE	0100	SINGLE FAMILY
MAP NUM		MKT AREA 04
NEIGHBORHOOD/LOC	4045.00	

AREA TYPE	TOTAL GROSS AREA	PCT OF BASE	TOT ADJ AREA	SUBAREA MARKET VALUE
BAS	1,647	100	1,647	186,409
FGR	504	55	277	31,351
FGR	528	55	290	32,822
FOP	33	30	10	1,132
PTO	143	5	7	792
TOTALS	2,855		2,231	252,507

MARKET ADJUSTMENTS

TYPE	MDL	EFF. AREA	TOT ADJ PTS	EFF. BASE RATE	REPL. COST NEW	AYB	EYB	ECON	FNCT		NORM	% COND
0900	01	2,231	99.6660	124.58	277,938	2004	2004	0	0	0	9.15	90.85

1 SNGL FAM – 100% - 2019 Heated Area: 1647 HX Base Yr 2019

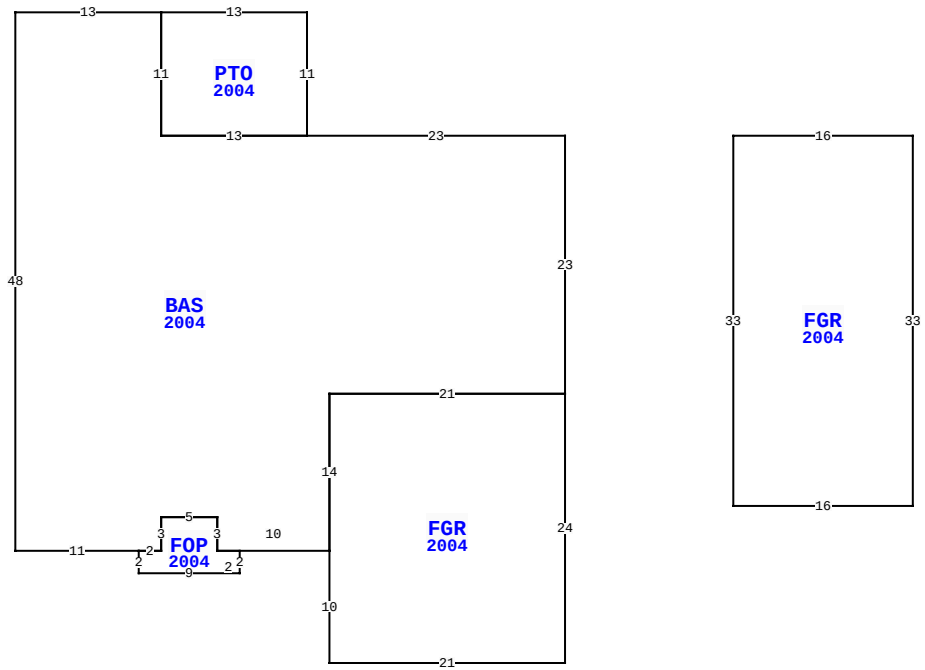

86088 MEADOWRIDGE CT, YULEE

BLD DATE	03/03/2023 NW	LGL DATE	
XF DATE		LAND DATE	
INC DATE		AG DATE	

VALUATION SUMMARY

VALUATION BY		STANDARD
Tax Group: 4	Tax Dist:	
BUILDING MARKET VALUE		252,507
TOTAL MARKET OB/XF VALUE		3,486
TOTAL LAND VALUE - MARKET		65,000
TOTAL MARKET VALUE		320,993
SOH/AGL Deduction		195,196
ASSESSED VALUE		125,797
TOTAL EXEMPTION VALUE	HX HB	50,000
BASE TAXABLE VALUE		75,797
TOTAL JUST VALUE		320,993
NCON VALUE		0
INCOME VALUE		
PREVIOUS YEAR MKT VALUE		323,179

PERMIT NUM	DESCRIPTION	AMT	ISSUED

SALES DATA

OFF RECORD Number	DATE	TYPE INST	Q U	V I	RSN CD	SALE PRICE
2199/1119	5/24/2018	WD	Q	I	01	235,000
GRANTOR: KERR GENE & CAROL						
GRANTEE: DAYOUB OSCAR JR & L						
1341/1905	8/15/2005	WD	Q	I		240,000
GRANTOR: JOHNSON DONALD & KATH						
GRANTEE: KERR GENE & CAROL						

BUILDING NOTES

BUILDING DIMENSIONS

BAS=[YR=2004] W23 PTO=[YR=2004] N11 W13 S11 E13$ W13 N11 W13 S48 E11 FOP=[YR=2004] S2 E9 N2 W2 N3 W5 S3 W2$ E2 N3 E5 S3 E10 FGR=[YR=2004] S10 E21 N24 W21 S14$ N14 E21 N23$ PTR=E15 FGR=[YR=2004] E16 S33 W16 N33$ W15$.

EXTRA FEATURES

LN	OB/XF CODE	DESCRIPTION	BLD	CAP	L	W	UNITS	UT	Adj R	ADJ UNIT PRICE	ORIG COND	YEAR ON	YEAR ACTUAL	Q	% COND	OB/XF MKT VALUE	NOTES
1	0811	CONCRETE B	0	100	0	0	798.00	SF	5.20	5.20	100	2004	2004	3	84	3,486	

LAND DESCRIPTION

TOTAL OB/XF 3,486

LN	USE CODE	CLS	LAND USE DESCRIPTION	CAP	RD	LOC ZONE	FRONT	DEPTH	TOT LND UTS	UNIT TYPE	DT	DPTH FACT	% COND	TOT ADJ	UNIT PRICE	ADJ UNIT PRICE	LAND VALUE	OTHER ADJUSTMENTS AND NOTES	YEAR	DENSITY	DECL	FRZ	YR	CONSRV
1	000100	C	SFR	100		RSF-1	0.00	0.00	1.00	LT		1.00	1.00	1.00	65,000.00	65,000.00	65,000							

REVIEW DATE 05/12/2019 BY KBA Total Acres: 0.00 Total Land Value: 65,000 Market: 0 Agricultural: 0 Common: 65,000 PRINTED 08/06/2024 BY SYS