LOT 62
IN OR 2225/307
MEADOWFIELD #3 PB 6/321-323

MIRAGLIOTTA ANGELO & VIRGINIA
86245 MEADOWWOOD DRIVE
YULEE, FL 32097

2024

38-2N-27-1332-0062-0000

NASSAU COUNTY PROPERTY

BUILDING CHARACTERISTICS

ELEMENT	CD	CONSTRUCTION
Exterior Wall	10	ABOVE AVG 70
Exterior Wall	16	WD FR STUC 30
Roof Structur	03	GABLE/HIP 100
Roof Cover	03	COMP SHNGL 100
Interior Wall	05	DRYWALL 100
Interior Floo	14	CARPET 70
Interior Floo	08	SHT VINYL 30
Air Condition	03	CENTRAL 100
Heating Type	04	AIR DUCTED 100
Bedrooms		4 100
Bathrooms		3 100
Frame	02	WOOD FRAME 100
Stories	1.5	1.5 100
Units		0 100
Occupancy	00	NONE 100
Quality	01	Quality Level 01

DOR CODE	0100	SINGLE FAMILY	
MAP NUM		MKT AREA	04
NEIGHBORHOOD/LOC	4045.00		

AREA TYPE	TOTAL GROSS AREA	PCT OF BASE	TOT ADJ AREA	SUBAREA MARKET VALUE
BAS	1,647	100	1,647	177,761
FGR	504	55	277	29,897
FOP	33	30	10	1,079
FUS	495	100	495	53,425
USP	143	30	43	4,641
TOTALS	2,822		2,472	266,803

MARKET ADJUSTMENTS

TYPE	MDL	EFF. AREA	TOT ADJ PTS	EFF. BASE RATE	REPL. COST NEW	AYB	EYB	ECON	FNCT		NORM	% COND
0900	01	2,472	95.0400	118.80	293,674	2004	2004	0	0	0	9.15	90.85

1 SNGL FAM – 100% - 2019 Heated Area: 2142 HX Base Yr 2019

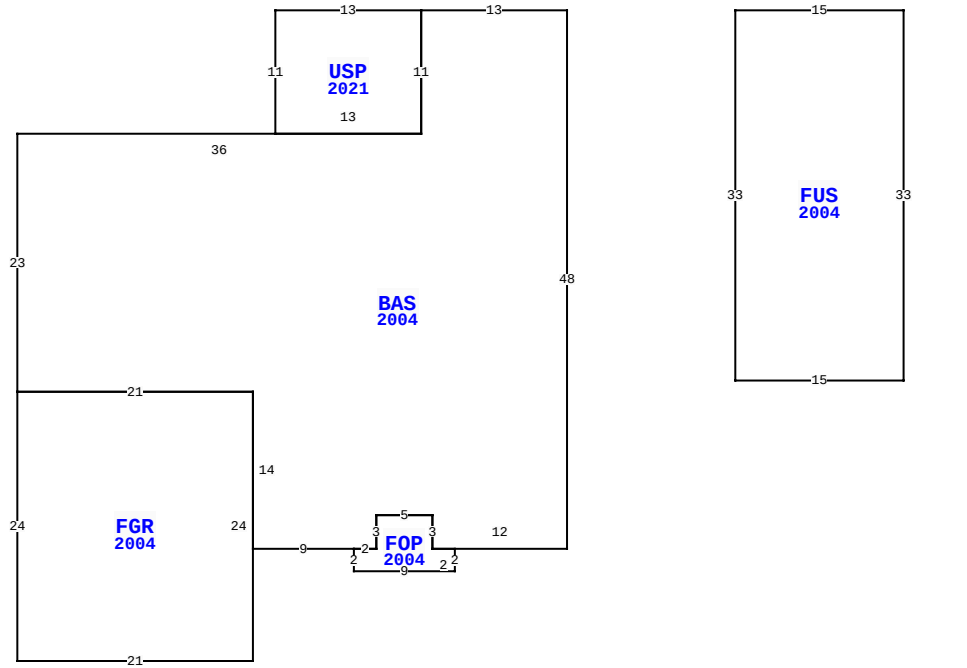

86245 MEADOWWOOD DR, YULEE

BLD DATE	03/03/2023 NW	LGL DATE	
XF DATE		LAND DATE	
INC DATE		AG DATE	

VALUATION SUMMARY

VALUATION BY		STANDARD
Tax Group: 4	Tax Dist:	
BUILDING MARKET VALUE		266,803
TOTAL MARKET OB/XF VALUE		6,566
TOTAL LAND VALUE - MARKET		65,000
TOTAL MARKET VALUE		338,369
SOH/AGL Deduction		122,651
ASSESSED VALUE		215,718
TOTAL EXEMPTION VALUE	HX HB	50,000
BASE TAXABLE VALUE		165,718
TOTAL JUST VALUE		338,369
NCON VALUE		0
INCOME VALUE		
PREVIOUS YEAR MKT VALUE		340,700

PERMIT NUM	DESCRIPTION	AMT	ISSUED
21007314	ADDITION	4,307	08/11/2021

SALES DATA

OFF RECORD Number	DATE	TYPE INST	Q U	V I	RSN CD	SALE PRICE
2225/0307	9/20/2018	WD	Q	I	02	239,000
GRANTOR: HARWELL JUSTIN & JENN						
GRANTEE: MIRAGLIOTTA ANGELO						
1866/1030	6/19/2013	WD	Q	I	02	158,000
GRANTOR: SELDOMRIDGE JEREMY						
GRANTEE: HARWELL JUSTIN & JE						

BUILDING NOTES

BUILDING DIMENSIONS

BAS=[YR=2004] W13 USP=[YR=2021] W13 S11 E13 N11$ S11 W36 S23
FGR=[YR=2004] S24 E21 N24 W21$ E21 S14 E9 FOP=[YR=2004] S2
E9 N2 W2 N3 W5 S3 W2$ E2 N3 E5 S3 E12 N48$ PTR= E15
FUS=[YR=2004] E15 S33 W15 N33$ W15$.

EXTRA FEATURES

LN	OB/XF CODE	DESCRIPTION	BLD	CAP	L	W	UNITS	UT	Adj R	ADJ UNIT PRICE	ORIG COND	YEAR ON	YEAR ACTUAL	Q	% COND	OB/XF MKT VALUE	NOTES
1	0500	FP-PRE FAB	0	100	0	0	1.00	UT	3,500.00	3,500.00	100	2004	2004	3	88	3,080	
2	0811	CONCRETE B	0	100	0	0	798.00	SF	5.20	5.20	100	2004	2004	3	84	3,486	

LAND DESCRIPTION

TOTAL OB/XF 6,566

LN	USE CODE	CLS	LAND USE DESCRIPTION	CAP	RD	LOC ZONE	FRONT	DEPTH	TOT LND UTS	UNIT TYPE	DT	DPTH FACT	% COND	TOT ADJ	UNIT PRICE	ADJ UNIT PRICE	LAND VALUE	OTHER ADJUSTMENTS AND NOTES	YEAR	DENSITY	DECL	FRZ	YR	CONSRV
1	000100	C	SFR	100		RSF-1	0.00	0.00	1.00	LT		1.00	1.00	1.00	65,000.00	65,000.00	65,000							

REVIEW DATE 12/21/2021 BY NW Total Acres: 0.00 Total Land Value: 65,000 Market: 0 Agricultural: 0 Common: 65,000 PRINTED 08/06/2024 BY SYS