LOT 6
IN OR 1442/714 & OR 1850/1426
MEADOWFIELD UNIT 2A PB 6/271

SMITH KEVIN M
86480 RIVERWOOD DR
YULEE, FL 32097

2024

38-2N-27-1332-0006-0000

NASSAU COUNTY PROPERTY

BUILDING CHARACTERISTICS

ELEMENT	CD	CONSTRUCTION
Exterior Wall	10	ABOVE AVG 70
Exterior Wall	16	WD FR STUC 30
Roof Structur	03	GABLE/HIP 100
Roof Cover	03	COMP SHNGL 100
Interior Wall	05	DRYWALL 100
Interior Floo	14	CARPET 80
Interior Floo	11	CLAY TILE 20
Air Condition	03	CENTRAL 100
Heating Type	04	AIR DUCTED 100
Bedrooms		4 100
Bathrooms		3 100
Frame	02	WOOD FRAME 100
Stories	2.	2. 100
Units		0 100
Occupancy	00	NONE 100
Quality	01	Quality Level 01
DOR CODE	0100	SINGLE FAMILY
MAP NUM		MKT AREA 04
NEIGHBORHOOD/LOC	4045.00	

AREA TYPE	TOTAL GROSS AREA	PCT OF BASE	TOT ADJ AREA	SUBAREA MARKET VALUE
BAS	1,671	100	1,671	182,584
FGR	483	55	266	29,065
FOP	28	30	8	874
FUS	693	100	693	75,722
PTO	143	5	7	765
TOTALS	3,018		2,645	289,010

MARKET ADJUSTMENTS

TYPE	MDL	EFF. AREA	TOT ADJ PTS	EFF. BASE RATE	REPL. COST NEW	AYB	EYB	ECON	FNCT		NORM	% COND
0900	01	2,645	97.2864	121.61	321,658	2002	2002	0	0	0	10.15	89.85

1 SNGL FAM – 100% - 2007 Heated Area: 2364 HX Base Yr 2007

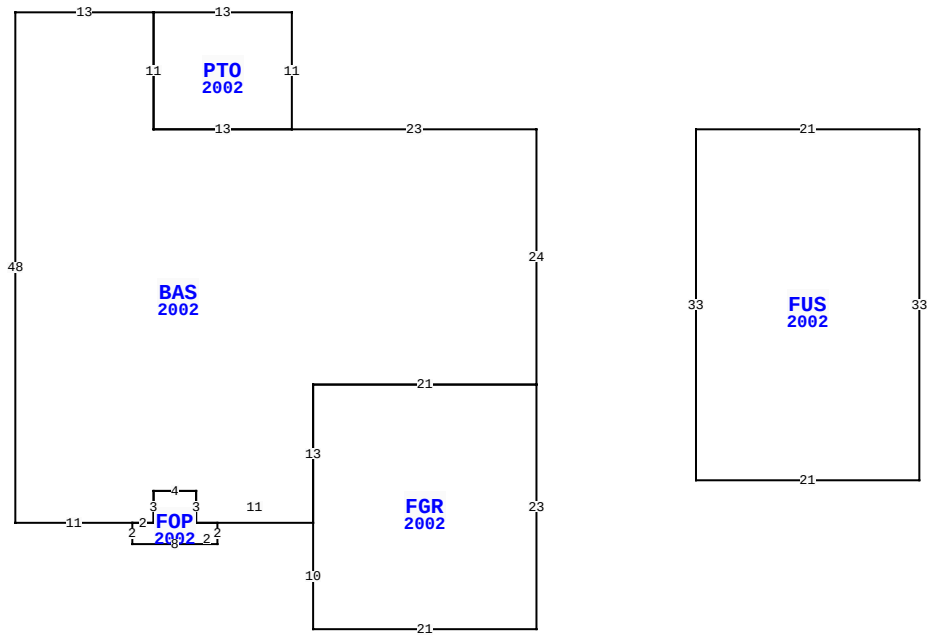

86480 RIVERWOOD DR, YULEE

BLD DATE	03/03/2023 NW	LGL DATE	
XF DATE		LAND DATE	
INC DATE		AG DATE	

VALUATION SUMMARY

VALUATION BY		STANDARD
Tax Group: 4	Tax Dist:	
BUILDING MARKET VALUE		289,010
TOTAL MARKET OB/XF VALUE		3,279
TOTAL LAND VALUE - MARKET		65,000
TOTAL MARKET VALUE		357,289
SOH/AGL Deduction		171,102
ASSESSED VALUE		186,187
TOTAL EXEMPTION VALUE	HX HB SX DX	105,000
BASE TAXABLE VALUE		81,187
TOTAL JUST VALUE		357,289
NCON VALUE		0
INCOME VALUE		
PREVIOUS YEAR MKT VALUE		359,750

PERMIT NUM	DESCRIPTION	AMT	ISSUED
B0209876	NEW CONSTR	149,285	06/01/2002

SALES DATA

OFF RECORD Number	DATE	TYPE INST	Q U	V I	RSN CD	SALE PRICE
1850/1426	7/22/2011	WD	U	I	11	100
GRANTOR: BROWN JANICE						
GRANTEE: SMITH KEVIN M						
1442/0714	9/06/2006	WD	Q	I		250,600
GRANTOR: LENTZ TOBY R & ROBIN						
GRANTEE: SMITH KEVIN M & JAN						

BUILDING NOTES

BUILDING DIMENSIONS

BAS=[YR=2002] W23 PTO=[YR=2002] N11 W13 S11 E13 $ W13 N11 W13 S48 E11 FOP=[YR=2002] S2 E8 N2 W2 N3 W4 S3 W2 $ E2 N3 E4 S3 E11 FGR=[YR=2002] S10 E21 N23 W21 S13 $ N13 E21 N24 $ PTR= E15 FUS=[YR=2002] E21 S33 W21 N33 $ W15 $.

EXTRA FEATURES

LN	OB/XF CODE	DESCRIPTION	BLD	CAP	L	W	UNITS	UT	Adj R	ADJ UNIT PRICE	ORIG COND	YEAR ON	YEAR ACTUAL	Q	% COND	OB/XF MKT VALUE	NOTES
1	0811	CONCRETE B	0	100	0	0	769.00	SF	5.20	5.20	100	2002	2002	3	82	3,279	

LAND DESCRIPTION

TOTAL OB/XF 3,279

LN	USE CODE	CLS	LAND USE DESCRIPTION	CAP	RD	LOC ZONE	FRONT	DEPTH	TOT LND UTS	UNIT TYPE	DT	DPTH FACT	% COND	TOT ADJ	UNIT PRICE	ADJ UNIT PRICE	LAND VALUE	OTHER ADJUSTMENTS AND NOTES	YEAR	DENSITY	DECL	FRZ	YR	CONSRV
1	000100	C	SFR	100	0003	RSF-1	0.00	0.00	1.00	LT		1.00	1.00	1.00	65,000.00	65,000.00	65,000							

REVIEW DATE 05/12/2019 BY KBA Total Acres: 0.00 Total Land Value: 65,000 Market: 0 Agricultural: 0 Common: 65,000 PRINTED 08/06/2024 BY SYS