LOT 12
MEADOWFIELD UNIT 1-A PB 6/148

HARDY LINTON JR & LORETTA A L/E/
86194 RIVERWOOD DRIVE
YULEE, FL 32097

**2024**

**38-2N-27-1331-0012-0000**

## BUILDING CHARACTERISTICS

| ELEMENT | CD | CONSTRUCTION |
|---|---|---|
| Exterior Wall | 20 | FACE BRICK 100 |
| Roof Structur | 03 | GABLE/HIP 100 |
| Roof Cover | 03 | COMP SHNGL 100 |
| Interior Wall | 05 | DRYWALL 100 |
| Interior Floo | 12 | HARDWOOD 60 |
| Interior Floo | 14 | CARPET 40 |
| Air Condition | 03 | CENTRAL 100 |
| Heating Type | 04 | AIR DUCTED 100 |
| Bedrooms | | 4 100 |
| Bathrooms | | 2 100 |
| Frame | 02 | WOOD FRAME 100 |
| Stories | 1. | 1. 100 |
| Units | | 0 100 |
| Occupancy | 00 | NONE 100 |
| Quality | 01 | Quality Level 01 |
| DOR CODE | 0100 | SINGLE FAMILY |
| MAP NUM | | MKT AREA 04 |
| NEIGHBORHOOD/LOC | 4045.00 | |

| AREA TYPE | TOTAL GROSS AREA | PCT OF BASE | TOT ADJ AREA | SUBAREA MARKET VALUE |
|---|---|---|---|---|
| BAS | 2,081 | 100 | 2,081 | 206,391 |
| FGR | 509 | 55 | 280 | 27,770 |
| FOP | 32 | 30 | 10 | 992 |
| SFB | 300 | 80 | 240 | 23,803 |
| USP | 613 | 30 | 184 | 18,249 |
| TOTALS | 3,535 | | 2,795 | 277,205 |

## MARKET ADJUSTMENTS

| TYPE | MDL | EFF. AREA | TOT ADJ PTS | EFF. BASE RATE | REPL. COST NEW | AYB | EYB | ECON | FNCT | | NORM | % COND |
|---|---|---|---|---|---|---|---|---|---|---|---|---|
| 0900 | 01 | 2,795 | 94.1760 | 117.72 | 329,027 | 1999 | 2002 | 0 | 0 | 0 | 15.75 | 84.25 |

1 SNGL FAM – 100% - 2020 Heated Area: 2321 HX Base Yr

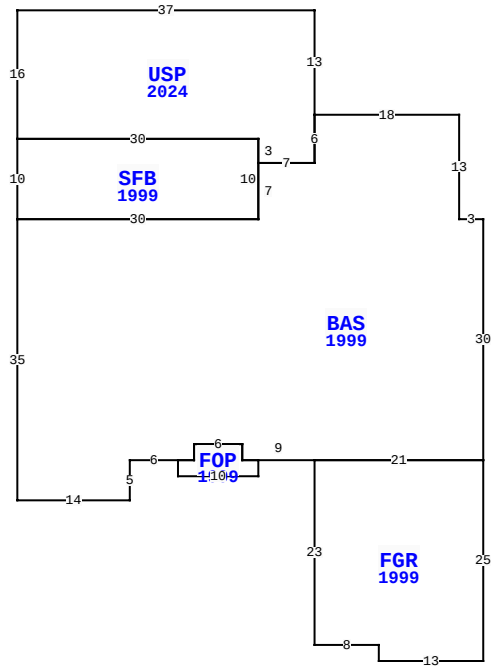


86194 RIVERWOOD DR, YULEE

| | | | |
|---|---|---|---|
| BLD DATE | 03/03/2023 NW | LGL DATE | |
| XF DATE | | LAND DATE | |
| INC DATE | | AG DATE | |

## NASSAU COUNTY PROPERTY

PAGE 1 of 1 4

### VALUATION SUMMARY

| | | |
|---|---|---|
| VALUATION BY | | STANDARD |
| Tax Group: 4 | Tax Dist: | |
| BUILDING MARKET VALUE | | 277,205 |
| TOTAL MARKET OB/XF VALUE | | 21,375 |
| TOTAL LAND VALUE - MARKET | | 65,000 |
| TOTAL MARKET VALUE | | 363,580 |
| SOH/AGL Deduction | | 1,286 |
| ASSESSED VALUE | | 362,294 |
| TOTAL EXEMPTION VALUE | 13 | 362,294 |
| BASE TAXABLE VALUE | | 0 |
| TOTAL JUST VALUE | | 363,580 |
| NCON VALUE | | 35,281 |
| INCOME VALUE | | |
| PREVIOUS YEAR MKT VALUE | | 317,488 |

| PERMIT NUM | DESCRIPTION | AMT | ISSUED |
|---|---|---|---|
| 22016823 | REMODEL | 23,630 | 11/09/2022 |
| 22016826 | ADDITION | 20,209 | 11/09/2022 |
| 20011657 | WINDOWS | 15,805 | 11/24/2020 |
| B25262 | ADDITION | 2,100 | 10/01/2011 |

## SALES DATA

| OFF RECORD Number | DATE | TYPE INST | Q U / | V I / | RSN CD | SALE PRICE |
|---|---|---|---|---|---|---|
| 2716/872 | 6/04/2024 | LE | U | I | 11 | 100 |
| GRANTOR: HARDY LINTON JR & LOR | | | | | | |
| GRANTEE: HARDY QUINCY T | | | | | | |
| 0903/0185 | 10/12/1999 | WD | Q | I | | 159,100 |
| GRANTOR: ATLANTIC BUILDERS INC | | | | | | |
| GRANTEE: HARDY LINTON JR & L | | | | | | |

## BUILDING NOTES

## BUILDING DIMENSIONS

BAS=[YR=1999;ORIG=0,0] W3 N13 W18 S6 W7 S7 W30 S35 E14 N5 E6 E2 N2 E6 S2 E9 E21 N30 $
FGR=[YR=1999;ORIG=-21,30] S23 E8 S2 E13 N25 W21 $
SFB=[YR=1999;ORIG=-58,-10] S10 E30 N10 W30 $
FOP=[YR=1999;ORIG=-38,30] S2 E10 N2 W2 N2 W6 S2 W2 $
USP=[YR=2024;ORIG=-58,-26] E37 S13 S6 W7 N3 W30 N16 $
.

## EXTRA FEATURES

| LN | OB/XF CODE | DESCRIPTION | BLD | CAP | L | W | UNITS | UT | Adj R | ADJ UNIT PRICE | ORIG COND | YEAR ON | YEAR ACTUAL | Q | % COND | OB/XF MKT VALUE | NOTES |
|---|---|---|---|---|---|---|---|---|---|---|---|---|---|---|---|---|---|
| 1 | 0500 | FP-PRE FAB | 0 | 100 | 0 | 0 | 1.00 | UT | 3,500.00 | 3,500.00 | 100 | 1999 | 1999 | 3 | 83 | 2,905 | |
| 5 | 0855 | CONC PAVER | 0 | 100 | 0 | 0 | 204.00 | SF | 10.00 | 10.00 | 100 | 2024 | 2023 | | 100 | 2,040 | |
| 6 | 0855 | CONC PAVER | 0 | 100 | 0 | 0 | 1,523.00 | SF | 10.00 | 10.00 | 100 | 2024 | 2023 | | 100 | 15,230 | |
| 7 | 0855 | CONC PAVER | 0 | 100 | 0 | 0 | 120.00 | SF | 10.00 | 10.00 | 100 | 2024 | 2023 | | 100 | 1,200 | |

## LAND DESCRIPTION

TOTAL OB/XF 21,375

| LN | USE CODE | CLS | LAND USE DESCRIPTION | CAP | RD | LOC ZONE | FRONT | DEPTH | TOT LND UTS | UNIT TYPE | DT | DPTH FACT | % COND | TOT ADJ | UNIT PRICE | ADJ UNIT PRICE | LAND VALUE | OTHER ADJUSTMENTS AND NOTES | YEAR | DENSITY | DECL | FRZ | YR | CONSRV |
|---|---|---|---|---|---|---|---|---|---|---|---|---|---|---|---|---|---|---|---|---|---|---|---|---|
| 1 | 000100 | C | SFR | 100 | | RSF-1 | 0.00 | 0.00 | 1.00 | LT | | 1.00 | 1.00 | 1.00 | 65,000.00 | 65,000.00 | 65,000 | | | | | | | |

REVIEW DATE 12/13/2023 BY DJ Total Acres: 0.00 Total Land Value: 65,000 Market: 0 Agricultural: 0 Common: 65,000 PRINTED 08/06/2024 BY SYS