LOT 6
IN OR 934/1812
MEADOWFIELD UNIT 1-A PB 6/148

OGDEN PAMELA G
8694 RIVERWOOD DRIVE
YULEE, FL 32097

2024

38-2N-27-1331-0006-0000

NASSAU COUNTY PROPERTY

BUILDING CHARACTERISTICS

ELEMENT	CD	CONSTRUCTION
Exterior Wall	10	ABOVE AVG 80
Exterior Wall	20	FACE BRICK 20
Roof Structur	08	IRREGULAR 100
Roof Cover	03	COMP SHNGL 100
Interior Wall	05	DRYWALL 100
Interior Floo	14	CARPET 80
Interior Floo	11	CLAY TILE 20
Air Condition	03	CENTRAL 100
Heating Type	04	AIR DUCTED 100
Bedrooms		3 100
Bathrooms		2 100
Frame	02	WOOD FRAME 100
Stories	1.	1. 100
Units		0 100
Occupancy	00	NONE 100
Quality	01	Quality Level 01
DOR CODE	0100	SINGLE FAMILY
MAP NUM		MKT AREA 04
NEIGHBORHOOD/LOC	4045.00	

AREA TYPE	TOTAL GROSS AREA	PCT OF BASE	TOT ADJ AREA	SUBAREA MARKET VALUE
BAS	1,868	100	1,868	197,569
BAS	337	100	337	35,643
FGR	420	55	231	24,431
FOP	15	30	4	423
FOP	135	30	40	4,230
FSP	63	40	25	2,644
TOTALS	2,838		2,505	264,942

MARKET ADJUSTMENTS

TYPE	MDL	EFF. AREA	TOT ADJ PTS	EFF. BASE RATE	REPL. COST NEW	AYB	EYB	ECON	FNCT		NORM	% COND
0900	01	2,505	96.4224	120.53	301,928	2000	2000	0	0	0	12.25	87.75

1 SNGL FAM – 100% - 2001 Heated Area: 2205 HX Base Yr 2001

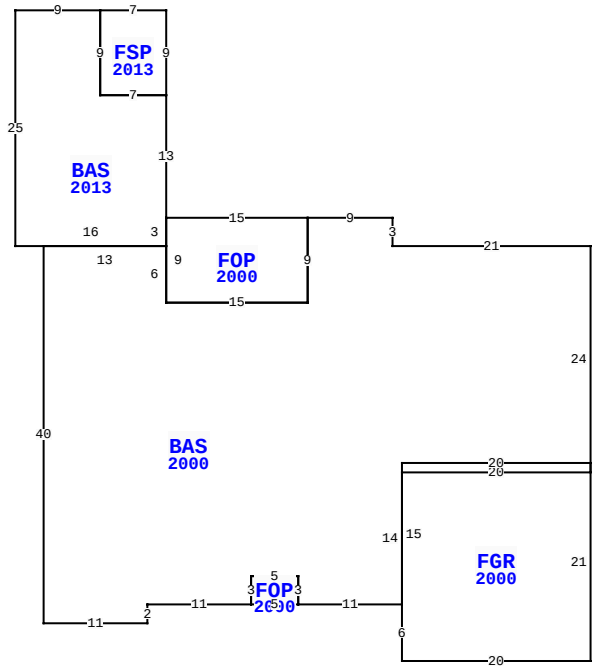

8694 RIVERWOOD DR, YULEE

BLD DATE	03/03/2023 NW	LGL DATE	
XF DATE		LAND DATE	
INC DATE		AG DATE	

VALUATION SUMMARY

VALUATION BY		STANDARD
Tax Group: 4	Tax Dist:	
BUILDING MARKET VALUE		264,942
TOTAL MARKET OB/XF VALUE		7,362
TOTAL LAND VALUE - MARKET		65,000
TOTAL MARKET VALUE		337,304
SOH/AGL Deduction		160,726
ASSESSED VALUE		176,578
TOTAL EXEMPTION VALUE	HX HB WX	55,000
BASE TAXABLE VALUE		121,578
TOTAL JUST VALUE		337,304
NCON VALUE		0
INCOME VALUE		
PREVIOUS YEAR MKT VALUE		339,785

PERMIT NUM	DESCRIPTION	AMT	ISSUED
M1217725	H/AC	0	11/01/2012
B26384	ADDITION	37,476	08/01/2012
006934	NEW CONSTR	104,526	03/01/2000

SALES DATA

OFF RECORD Number	DATE	TYPE INST	Q U	V I	RSN CD	SALE PRICE
0934/1812	6/02/2000	WD	Q	I		129,800
GRANTOR: ATLANTIC BUILDERS INC						
GRANTEE: OGDEN DAVID MICHAEL						
0919/0340	2/08/2000	WD	U	V	09	55,000
GRANTOR: MEADOWFIELD JOINT VEN						
GRANTEE: ATLANTIC BUILDERS I						

BUILDING NOTES

BUILDING DIMENSIONS

BAS=[YR=2000] W21 N3 W9 FOP=[YR=2000] W15 BAS=[YR=2013] N13 FSP=[YR=2013] N9 W7 S9 E7 $ W7 N9 W9 S25 E16 N3 $ S9 E15 N9 $ S9 W15 N6 W13 S40 E11 N2 E11 FOP=[YR=2000] E5 N3 W5 S3 $ N3 E5 S3 E11 FGR=[YR=2000] S6 E20 N21 W20 S15 $ N14 E20 N24 $.

EXTRA FEATURES

LN	OB/XF CODE	DESCRIPTION	BLD	CAP	L	W	UNITS	UT	Adj R	ADJ UNIT PRICE	ORIG COND	YEAR ON	YEAR ACTUAL	Q	% COND	OB/XF MKT VALUE	NOTES
1	0810	CONCRETE A	0	100	48	16	768.00	SF	6.50	6.50	100	2000	2000	3	79	3,944	
2	0810	CONCRETE A	0	100	0	0	93.00	SF	6.50	6.50	100	2000	2000	3	79	478	
3	0500	FP-PRE FAB	0	100	0	0	1.00	UT	3,500.00	3,500.00	100	2000	2000	3	84	2,940	

LAND DESCRIPTION

TOTAL OB/XF 7,362

LN	USE CODE	CLS	LAND USE DESCRIPTION	CAP	RD	LOC ZONE	FRONT	DEPTH	TOT LND UTS	UNIT TYPE	DT	DPTH FACT	% COND	TOT ADJ	UNIT PRICE	ADJ UNIT PRICE	LAND VALUE	OTHER ADJUSTMENTS AND NOTES	YEAR	DENSITY	DECL	FRZ	YR	CONSRV
1	000100	C	SFR	100		RSF-1	0.00	0.00	1.00	LT		1.00	1.00	1.00	65,000.00	65,000.00	65,000							

REVIEW DATE 05/12/2019 BY KBA Total Acres: 0.00 Total Land Value: 65,000 Market: 0 Agricultural: 0 Common: 65,000 PRINTED 08/06/2024 BY SYS