LOT 29
ESMT OR 1217/20
MEADOWFIELD BLUFFS PB 5/105

SIMMONS PETER & SUEZAHN
86245 MEADOWFIELD BLUFFS RD
YULEE, FL 32097

2024

38-2N-27-1330-0029-0000

NASSAU COUNTY PROPERTY

BUILDING CHARACTERISTICS

ELEMENT	CD	CONSTRUCTION
Exterior Wall	20	FACE BRICK 100
Roof Structur	08	IRREGULAR 100
Roof Cover	03	COMP SHNGL 100
Interior Wall	05	DRYWALL 100
Interior Floo	12	HARDWOOD 70
Interior Floo	11	CLAY TILE 30
Air Condition	03	CENTRAL 100
Heating Type	04	AIR DUCTED 100
Bedrooms		6 100
Bathrooms		6 100
Frame	02	WOOD FRAME 100
Stories	2.	2. 100
Units		0 100
Occupancy	00	NONE 100
Quality	04	Quality Level 04
DOR CODE	0100	SINGLE FAMILY
MAP NUM		MKT AREA 04
NEIGHBORHOOD/LOC	4056.00	

AREA TYPE	TOTAL GROSS AREA	PCT OF BASE	TOT ADJ AREA	SUBAREA MARKET VALUE
BAS	50	100	50	6,718
BAS	2,246	100	2,246	301,767
FGR	816	55	449	60,327
FOP	132	30	40	5,374
FOP	174	30	52	6,986
FOP	709	30	213	28,619
FOP	1,061	30	318	42,726
FST	35	55	19	2,553
FUS	1,803	100	1,803	242,246
TOTALS	7,026		5,190	697,315

MARKET ADJUSTMENTS

TYPE	MDL	EFF. AREA	TOT ADJ PTS	EFF. BASE RATE	REPL. COST NEW	AYB	EYB	ECON	FNCT		NORM	% COND
0900	01	5,190	120.0990	150.12	779,123	2005	2009	0	0	0	10.50	89.50

1 SNGL FAM – 100% - 2023 Heated Area: 4099 HX Base Yr 2023

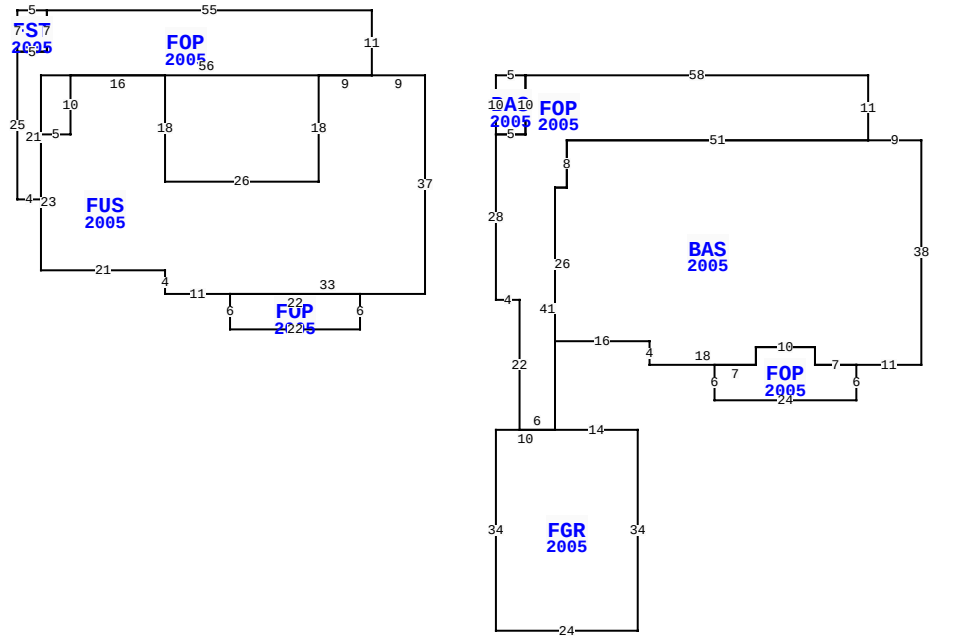

86245 MEADOWFIELD BLUFFS RD, YULEE

BLD DATE		LGL DATE	
XF DATE		LAND DATE	03/18/2024 MLU
INC DATE		AG DATE	

VALUATION SUMMARY

VALUATION BY		STANDARD
Tax Group: 4	Tax Dist:	
BUILDING MARKET VALUE		697,315
TOTAL MARKET OB/XF VALUE		101,703
TOTAL LAND VALUE - MARKET		225,000
TOTAL MARKET VALUE		1,024,018
SOH/AGL Deduction		61,264
ASSESSED VALUE		962,754
TOTAL EXEMPTION VALUE	HX HB	50,000
BASE TAXABLE VALUE		912,754
TOTAL JUST VALUE		1,024,018
NCON VALUE		0
INCOME VALUE		
PREVIOUS YEAR MKT VALUE		973,176

PERMIT NUM	DESCRIPTION	AMT	ISSUED
R1213211	REPAIR/RRF	8,780	11/01/2012
B0412549	NEW CONSTR	700,000	02/09/2006

SALES DATA

OFF RECORD Number	DATE	TYPE INST	Q U	V I	RSN CD	SALE PRICE
2548/0511	3/15/2022	WD	Q	I	01	1,185,000
GRANTOR: BAKER JOHN G						
GRANTEE: SIMMONS PETER & SUE						
2548/0509	2/10/2021	WD	U	I	16	343,000
GRANTOR: BAKER ANNA J						
GRANTEE: BAKER JOHN GARY						

BUILDING NOTES

BUILDING DIMENSIONS

FUS=[YR=2005] S18 W26 N18 W16 S10 W5 S23 E21 S4 E11
FOP=[YR=2005] S6 E22 N6 W22 $ E33 N37 W9 FOP=[YR=2005] N11 W55 FST=[YR=2005] W5 S7 E5 N7 $ S7 W5 S25 E4 N21 E56 $ W9 $ PTR= E30 BAS=[YR=2005] E5 FOP=[YR=2005] E58 S11
BAS=[YR=2005] E9 S38 W11 FOP=[YR=2005] S6 W24 N6 E7 N3 E10 S3 E7 $ W7 N3 W10 S3 W18 N4 W16 N26 E2 N8 E51$ W51 S8 W2 S41
FGR=[YR=2005] E14 S34 W24 N34 E10$ W6 N22 W4 N28 E5 N10 $ S10 W5 N10 $ W30 $.

EXTRA FEATURES

LN	OB/XF CODE	DESCRIPTION	BLD	CAP	L	W	UNITS	UT	Adj R	ADJ UNIT PRICE	ORIG COND	YEAR ON	YEAR ACTUAL	Q	% COND	OB/XF MKT VALUE	NOTES
1	0502	FP-CUSTOM	0	100	0	0	1.00	UT	10,000.00	10,000.00	100	2005	2005	3	89	8,900	
2	0855	CONC PAVER	0	100	0	0	5,667.00	SF	10.00	10.00	100	2005	2005	3	86	48,736	
3	0920	CWALL-WD/M	0	100	0	0	117.00	LF	390.00	390.00	100	2005	2005	3	24	10,951	
4	0680	POLE SHED	0	100	12	16	192.00	SF	10.00	10.00	100	2005	2005	3	40	768	
5	0300	BOAT DCK W	0	100	0	0	372.00	SF	40.00	40.00	100	2005	2005	3	40	5,952	
6	0311	WD GANG WY	0	100	0	0	16.00	SF	45.00	45.00	100	2005	2005	3	24	173	
7	0303	FLT DOCK W	0	100	16	10	160.00	SF	26.00	26.00	100	2005	2005	3	40	1,664	
8	0322	BOAT LFT L	0	100	0	0	1.00	UT	1,500.00	1,500.00	100	2005	2005	3	24	360	
9	0323	BOAT LFT H	0	100	0	0	1.00	UT	2,500.00	2,500.00	100	2005	2005	3	24	600	
10	1242	WD DECK A	0	100	0	0	40.00	SF	10.00	10.00	100	2005	2005	3	24	96	

TOTAL OB/XF 78,200

LAND DESCRIPTION

LN	USE CODE	CLS	LAND USE DESCRIPTION	CAP	RD	LOC ZONE	FRONT	DEPTH	TOT LND UTS	UNIT TYPE	DT	DPTH FACT	% COND	TOT ADJ	UNIT PRICE	ADJ UNIT PRICE	LAND VALUE	OTHER ADJUSTMENTS AND NOTES	YEAR	DENSITY	DECL	FRZ	YR	CONSRV
1	000130	C	SFR WATER	100	0006	RSF-1	0.00	0.00	1.00	LT		1.00	1.00	1.00	225,000.00	225,000.00	225,000							

REVIEW DATE 05/12/2019 BY KBA Total Acres: 0.00 Total Land Value: 225,000 Market: 0 Agricultural: 0 Common: 225,000 PRINTED 08/06/2024 BY SYS

LOT 29
ESMT OR 1217/20
MEADOWFIELD BLUFFS PB 5/105

SIMMONS PETER & SUEZAHN
86245 MEADOWFIELD BLUFFS RD
YULEE, FL 32097

2024

38-2N-27-1330-0029-0000

NASSAU COUNTY PROPERTY

BUILDING CHARACTERISTICS

ELEMENT	CD	CONSTRUCTION

DOR CODE	0100	SINGLE FAMILY	
MAP NUM		MKT AREA	04
NEIGHBORHOOD/LOC	4056.00		

AREA TYPE	TOTAL GROSS AREA	PCT OF BASE	TOT ADJ AREA	SUBAREA MARKET VALUE
TOTALS				

MARKET ADJUSTMENTS

TYPE	MDL	EFF. AREA	TOT ADJ PTS	EFF. BASE RATE	REPL. COST NEW	AYB	EYB	ECON	FNCT		NORM	% COND

BLD DATE		LGL DATE	
XF DATE		LAND DATE	03/18/2024 MLU
INC DATE		AG DATE	

VALUATION SUMMARY

VALUATION BY		STANDARD
Tax Group: 4	Tax Dist:	
BUILDING MARKET VALUE		697,315
TOTAL MARKET OB/XF VALUE		101,703
TOTAL LAND VALUE - MARKET		225,000
TOTAL MARKET VALUE		1,024,018
SOH/AGL Deduction		61,264
ASSESSED VALUE		962,754
TOTAL EXEMPTION VALUE	HX HB	50,000
BASE TAXABLE VALUE		912,754
TOTAL JUST VALUE		1,024,018
NCON VALUE		0
INCOME VALUE		
PREVIOUS YEAR MKT VALUE		973,176

PERMIT NUM	DESCRIPTION	AMT	ISSUED

SALES DATA

OFF RECORD Number	DATE	TYPE INST	Q / U	V / I	RSN CD	SALE PRICE
2548/0511	3/15/2022	WD	Q	I	01	1,185,000
GRANTOR: BAKER JOHN G						
GRANTEE: SIMMONS PETER & SUE						
2548/0509	2/10/2021	WD	U	I	16	343,000
GRANTOR: BAKER ANNA J						
GRANTEE: BAKER JOHN GARY						

BUILDING NOTES

BUILDING DIMENSIONS

EXTRA FEATURES

LN	OB/XF CODE	DESCRIPTION	BLD	CAP	L	W	UNITS	UT	Adj R	ADJ UNIT PRICE	ORIG COND	YEAR ON	YEAR ACTUAL	Q	% COND	OB/XF MKT VALUE	NOTES
11	0820	WOOD WALK	0	100	0	0	1,988.00	SF	11.75	11.75	100	2005	2005	3	40	9,344	
12	0462	ST/AL FNC	0	100	0	0	384.00	SF	10.00	10.00	100	2007	2007	3	48	1,843	
13	0462	ST/AL FNC	0	100	0	0	48.00	SF	10.00	10.00	100	2007	2007	3	48	230	
14	0350	CARPORT WD	0	100	26	18	468.00	SF	13.00	13.00	100	2007	2007	3	31	1,886	
15	0409	ELEVATOR R	0	100	0	0	1.00	UT	10,200.00	10,200.00	0	2005	2005	3	100	10,200	

LAND DESCRIPTION

TOTAL OB/XF 23,503

LN	USE CODE	CLS	LAND USE DESCRIPTION	CAP	RD	LOC ZONE	FRONT	DEPTH	TOT LND UTS	UNIT TYPE	DT	DPTH FACT	% COND	TOT ADJ	UNIT PRICE	ADJ UNIT PRICE	LAND VALUE	OTHER ADJUSTMENTS AND NOTES	YEAR	DENSITY	DECL	FRZ	YR	CONSRV

REVIEW DATE 05/12/2019 BY KBA Total Acres: 0.00 Total Land Value: 225,000 Market: 0 Agricultural: 0 Common: 225,000 PRINTED 08/06/2024 BY SYS