LOT 9
IN OR 2109/24
MEADOWFIELD BLUFFS PB 5/105

LAWRIMORE RUSSELL H JR/HASTINGS KALICIA D
86433 MEADOWFIELD BLUFFS RD
YULEE, FL 32097

2024

38-2N-27-1330-0009-0000

NASSAU COUNTY PROPERTY

BUILDING CHARACTERISTICS

ELEMENT	CD	CONSTRUCTION
Exterior Wall	31	HARDIE BRD 100
Roof Structur	03	GABLE/HIP 100
Roof Cover	03	COMP SHNGL 100
Interior Wall	05	DRYWALL 100
Interior Floo	11	CLAY TILE 60
Interior Floo	14	CARPET 40
Air Condition	03	CENTRAL 100
Heating Type	04	AIR DUCTED 100
Bedrooms		4 100
Bathrooms		4 100
Frame	02	WOOD FRAME 100
Stories	2.	2. 100
Units		0 100
Occupancy	00	NONE 100
Quality	04	Quality Level 04
DOR CODE	0100	SINGLE FAMILY
MAP NUM		MKT AREA 04
NEIGHBORHOOD/LOC	4056.00	

AREA TYPE	TOTAL GROSS AREA	PCT OF BASE	TOT ADJ AREA	SUBAREA MARKET VALUE
BAL	180	15	27	3,458
BAS	2,775	100	2,775	355,466
FGR	325	55	179	22,929
FGR	540	55	297	38,045
FOP	170	30	51	6,533
FOP	220	30	66	8,454
FOP	350	30	105	13,451
FUS	1,116	100	1,116	142,955
PTO	30	5	2	256
TOTALS	5,706		4,618	591,547

MARKET ADJUSTMENTS

TYPE	MDL	EFF. AREA	TOT ADJ PTS	EFF. BASE RATE	REPL. COST NEW	AYB	EYB	ECON	FNCT		NORM	% COND
0900	01	4,618	104.5674	130.71	603,619	2018	2018	0	0	0	2.00	98.00

1 SNGL FAM – 100% - 2020 Heated Area: 3891 HX Base Yr 2020

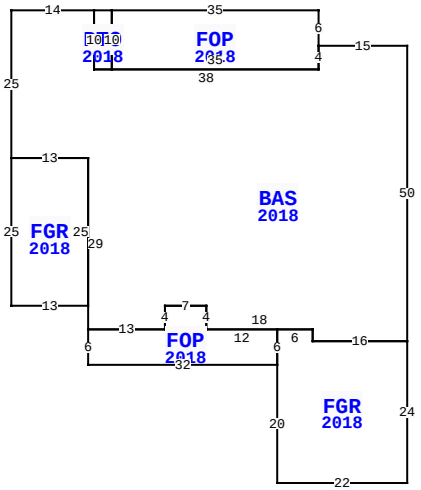

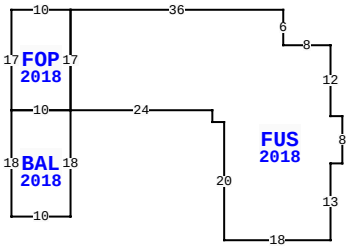

86433 MEADOWFIELD BLUFFS RD, YULEE

BLD DATE		LGL DATE	
XF DATE		LAND DATE	03/18/2024 MLU
INC DATE		AG DATE	

VALUATION SUMMARY

VALUATION BY		STANDARD
Tax Group: 4	Tax Dist:	
BUILDING MARKET VALUE		613,765
TOTAL MARKET OB/XF VALUE		98,304
TOTAL LAND VALUE - MARKET		225,000
TOTAL MARKET VALUE		937,069
SOH/AGL Deduction		199,154
ASSESSED VALUE		737,915
TOTAL EXEMPTION VALUE	HX HB	50,000
BASE TAXABLE VALUE		687,915
TOTAL JUST VALUE		937,069
NCON VALUE		0
INCOME VALUE		
PREVIOUS YEAR MKT VALUE		888,258

PERMIT NUM	DESCRIPTION	AMT	ISSUED
18012056	CO ISSUED	0	12/10/2018
18009294	ADDITION	12,500	12/01/2018
18008738	SWIM POOL	40,000	08/27/2018
18004975	GARAGE	78,870	05/16/2018
18003124	NEW CONSTR	500,681	03/27/2018

SALES DATA

OFF RECORD Number	DATE	TYPE INST	Q / U	V / I	RSN CD	SALE PRICE
2109/0024	3/27/2017	WD	Q	V	01	139,000
GRANTOR: ERICKSEN TODD S						
GRANTEE: LAWRIMORE RUSSELL H						
1405/1756	4/20/2006	WD	Q	V		195,000
GRANTOR: BAILEY ROBERT L & VIC						
GRANTEE: ERICKSEN TODD S						

BUILDING NOTES

BUILDING DIMENSIONS

BAS=[YR=2018] W15 FOP=[YR=2018] N6 W35 PTO=[YR=2018] W3 S10 E3 N10$ S10 E35 N4$ S4 W38 N10 W14 S25 FGR=[YR=2018] S25 E13 N25 W13$ E13 S29 FOP=[YR=2018] S6 E32 FGR=[YR=2018] S20 E22 N24 W16 N2 W6 S6$ N6 W12 N4 W7 S4 W13$ E13 N4 E7 S4 E18 S2 E16 N50$ PTR=[YR=2018] E30 FOP=[YR=2018] E10 FUS=[YR=2018] E36 S6 E8 S12 E2 S8 W2 S13 W18 N20 W2 N2 W24 BAL=[YR=2018] S18 W10 N18 E10 $ N17$ S17 W10 N17$ W30$.

EXTRA FEATURES

L N	OB/XF CODE	DESCRIPTION	BLD	CAP	L	W	UNITS	UT	Adj R	ADJ UNIT PRICE	ORIG COND	YEAR ON	YEAR ACTUAL	Q	% COND	OB/XF MKT VALUE	NOTES
1	0861	POOL GUNIT	0	100	0	0	490.00	SF	85.00	85.00	100	2018	2018	3	87	36,236	
2	0855	CONC PAVER	0	100	0	0	836.00	SF	10.00	10.00	100	2018	2018	3	97	8,109	
3	0871	POOL HTR R	0	100	0	0	1.00	UT	2,000.00	2,000.00	100	2018	2018	3	82	1,640	
4	0911	SCRN RM A	0	100	0	0	1,326.00	SF	17.50	17.50	100	2018	2018	3	82	19,028	
5	0812	CONCRETE C	0	100	0	0	6,295.00	SF	4.00	4.00	100	2018	2018	3	97	24,425	
6	0476	VF 6 SBPL	0	100	0	0	246.00	LF	32.00	32.00	100	2018	2018	3	94	7,400	
7	0470	VNYL GATE	0	100	0	0	2.00	UT	300.00	300.00	100	2018	2018	3	94	564	
8	0479	VF PICKET	0	100	0	0	96.00	LF	10.00	10.00	100	2018	2018	3	94	902	

LAND DESCRIPTION

TOTAL OB/XF 98,304

L N	USE CODE	CLS	LAND USE DESCRIPTION	CAP	R D	LOC ZONE	FRONT	DEPTH	TOT LND UTS	UNIT TYPE	D T	DPTH FACT	% COND	TOT ADJ	UNIT PRICE	ADJ UNIT PRICE	LAND VALUE	OTHER ADJUSTMENTS AND NOTES	YEAR	DENSITY	DECL	FRZ	YR	CONSRV
1	000130	C	SFR WATER	100		RSF-1	0.00	0.00	1.00	LT		1.00	1.00	1.00	225,000.00	225,000.00	225,000							

REVIEW DATE 05/07/2019 BY DJ Total Acres: 0.00 Total Land Value: 225,000 Market: 0 Agricultural: 0 Common: 225,000 PRINTED 08/06/2024 BY SYS

LOT 9
IN OR 2109/24
MEADOWFIELD BLUFFS PB 5/105

LAWRIMORE RUSSELL H JR/HASTINGS KALICIA D
86433 MEADOWFIELD BLUFFS RD
YULEE, FL 32097

2024

38-2N-27-1330-0009-0000

NASSAU COUNTY PROPERTY

BUILDING CHARACTERISTICS

ELEMENT	CD	CONSTRUCTION
Exterior Wall	25	MOD METAL 100
Roof Structur	03	GABLE/HIP 100
Roof Cover	12	MODULAR MT 100
Interior Wall	07	NONE 100
Interior Floo	03	CONC FINSH 100
Air Condition	01	NONE 100
Heating Type	01	NONE 100
Bedrooms		0 100
Bathrooms		0 100
Frame	04	REIN CONC 100
Stories	0	0 100
Units		0 100
Occupancy	00	NONE 100
Quality	05	Quality Level 05

DOR CODE 0100 SINGLE FAMILY
MAP NUM | MKT AREA 04
NEIGHBORHOOD/LOC 4056.00

AREA TYPE	TOTAL GROSS AREA	PCT OF BASE	TOT ADJ AREA	SUBAREA MARKET VALUE
BAS	1,120	100	1,120	19,971
FOP	420	30	126	2,247
TOTALS	1,540		1,246	22,218

MARKET ADJUSTMENTS

TYPE	MDL	EFF. AREA	TOT ADJ PTS	EFF. BASE RATE	REPL. COST NEW	AYB	EYB	ECON	FNCT		NORM	% COND
6500	01	1,246	53.6360	18.77	23,387	2018	2018	0	0	0	5.00	95.00

2 GARAGE RES – 100% - 2020 Heated Area: 1120 HX Base Yr 2020

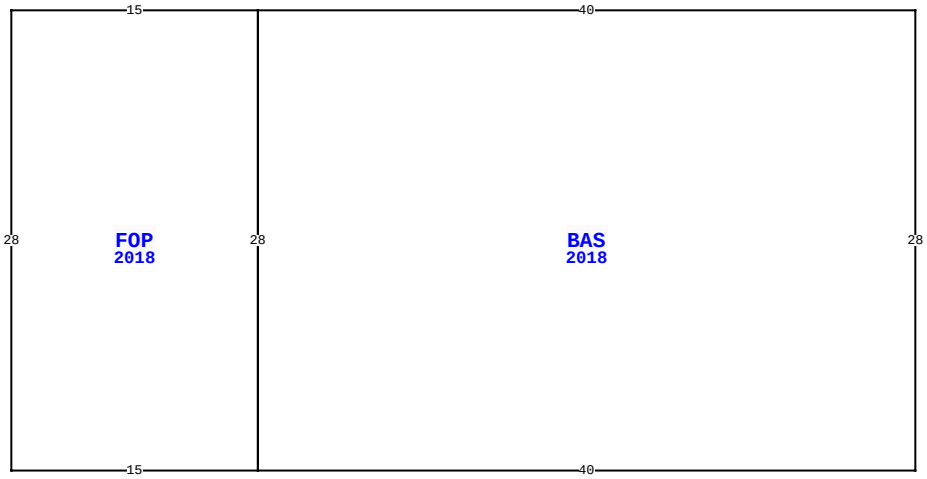

86433 MEADOWFIELD BLUFFS RD, YULEE

BLD DATE		LGL DATE	
XF DATE		LAND DATE	03/18/2024 MLU
INC DATE		AG DATE	

VALUATION SUMMARY

VALUATION BY		STANDARD
Tax Group: 4	Tax Dist:	
BUILDING MARKET VALUE		613,765
TOTAL MARKET OB/XF VALUE		98,304
TOTAL LAND VALUE - MARKET		225,000
TOTAL MARKET VALUE		937,069
SOH/AGL Deduction		199,154
ASSESSED VALUE		737,915
TOTAL EXEMPTION VALUE	HX HB	50,000
BASE TAXABLE VALUE		687,915
TOTAL JUST VALUE		937,069
NCON VALUE		0
INCOME VALUE		
PREVIOUS YEAR MKT VALUE		888,258

PERMIT NUM	DESCRIPTION	AMT	ISSUED

SALES DATA

OFF RECORD Number	DATE	TYPE INST	Q U	V I	RSN CD	SALE PRICE
2109/0024	3/27/2017	WD	Q	V	01	139,000
GRANTOR: ERICKSEN TODD S						
GRANTEE: LAWRIMORE RUSSELL H						
1405/1756	4/20/2006	WD	Q	V		195,000
GRANTOR: BAILEY ROBERT L & VIC						
GRANTEE: ERICKSEN TODD S						

BUILDING NOTES

BUILDING DIMENSIONS

BAS=[YR=2018] W40 FOP=[YR=2018] W15 S28 E15 N28$ S28 E40 N28$.

EXTRA FEATURES

LN	OB/XF CODE	DESCRIPTION	BLD	CAP	L	W	UNITS	UT	Adj R	ADJ UNIT PRICE	ORIG COND	YEAR ON	YEAR ACTUAL	Q	% COND	OB/XF MKT VALUE	NOTES

LAND DESCRIPTION

TOTAL OB/XF 0

LN	USE CODE	CLS	LAND USE DESCRIPTION	CAP	RD	LOC ZONE	FRONT	DEPTH	TOT LND UTS	UNIT TYPE	DT	DPTH FACT	% COND	TOT ADJ	UNIT PRICE	ADJ UNIT PRICE	LAND VALUE	OTHER ADJUSTMENTS AND NOTES	YEAR	DENSITY	DECL	FRZ	YR	CONSRV

REVIEW DATE 05/07/2019 BY DJ Total Acres: 0.00 Total Land Value: 225,000 Market: 0 Agricultural: 0 Common: 225,000 PRINTED 08/06/2024 BY SYS