LOT 7 & PARCEL 19-16
IN OR 1551/1280
EX ESMT OR 673/585

MCBRYAN MICHAEL E & JOCELYN
85366 MINER RD
YULEE, FL 32097

2024

38-2N-27-0580-0007-0000

NASSAU COUNTY PROPERTY

BUILDING CHARACTERISTICS

ELEMENT	CD	CONSTRUCTION
Exterior Wall	10	ABOVE AVG 100
Roof Structur	03	GABLE/HIP 100
Roof Cover	11	SLATE 100
Interior Wall	05	DRYWALL 100
Interior Floo	12	HARDWOOD 100
Air Condition	03	CENTRAL 100
Heating Type	04	AIR DUCTED 100
Bedrooms		4 100
Bathrooms		3 100
Frame	02	WOOD FRAME 100
Stories	2.	2. 100
Units		0 100
Occupancy	00	NONE 100
Quality	03	Quality Level 03

DOR CODE	0100	SINGLE FAMILY	
MAP NUM		MKT AREA	04
NEIGHBORHOOD/LOC	4053.00		

AREA TYPE	TOTAL GROSS AREA	PCT OF BASE	TOT ADJ AREA	SUBAREA MARKET VALUE
BAS	2,052	100	2,052	273,501
FSP	1,284	40	514	68,508
FUS	811	100	811	108,094
TOTALS	4,147		3,377	450,103

MARKET ADJUSTMENTS

TYPE	MDL	EFF. AREA	TOT ADJ PTS	EFF. BASE RATE	REPL. COST NEW	AYB	EYB	ECON	FNCT		NORM	% COND
0900	01	3,377	112.2400	140.30	473,793	2012	2012	0	0	0	5.00	95.00

2 SNGL FAM – 100% - 2013 Heated Area: 2863 HX Base Yr 2013

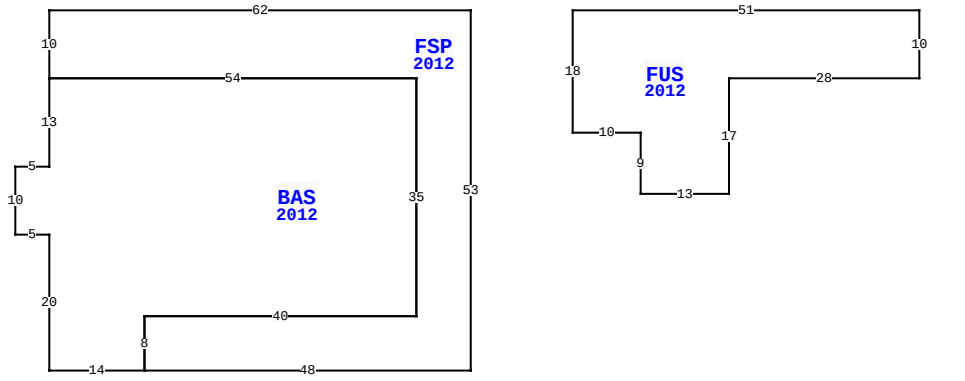

85366 MINER RD, YULEE

BLD DATE	12/14/2012	KK	LGL DATE
XF DATE			LAND DATE
INC DATE			AG DATE

VALUATION SUMMARY

VALUATION BY		STANDARD
Tax Group: 4	Tax Dist:	
BUILDING MARKET VALUE		450,103
TOTAL MARKET OB/XF VALUE		16,491
TOTAL LAND VALUE - MARKET		233,915
TOTAL MARKET VALUE		700,509
SOH/AGL Deduction		396,548
ASSESSED VALUE		303,961
TOTAL EXEMPTION VALUE	HX HB	50,000
BASE TAXABLE VALUE		253,961
TOTAL JUST VALUE		700,509
NCON VALUE		0
INCOME VALUE		
PREVIOUS YEAR MKT VALUE		680,544

PERMIT NUM	DESCRIPTION	AMT	ISSUED
B26018	CO ISSUED	0	12/12/2012
E25658	NEW CONSTR	0	12/01/2012
E25353	ELEC OTHER	0	08/01/2012
E25294	NEW CONSTR	0	08/01/2012
M17492	H/AC	0	08/01/2012
B26018	NEW CONSTR	295,828	05/01/2012

SALES DATA

OFF RECORD Number	DATE	TYPE INST	Q / U	V / I	RSN CD	SALE PRICE
1551/1280	2/20/2008	WD	Q	I		290,000
GRANTOR: BISHOP MICHAEL FLOYD						
GRANTEE: MCBRYAN MICHAEL E &						
1419/1882	6/14/2006	QC	U	I	01	100
GRANTOR: JOHNSON JEWELS F/K/A						
GRANTEE: BISHOP MICHAEL FLOY						

BUILDING NOTES

BUILDING DIMENSIONS

FSP=[YR=2012] W62 S10 BAS=[YR=2012] S13 W5 S10 E5 S20 E14 N8 E40 N35 W54$ E54 S35 W40 S8 E48 N53$ PTR=E15 FUS=[YR=2012] E51 S10 W28 S17 W13 N9 W10 N18$ W15$.

EXTRA FEATURES

LN	OB/XF CODE	DESCRIPTION	BLD	CAP	L	W	UNITS	UT	Adj R	ADJ UNIT PRICE	ORIG COND	YEAR ON	YEAR ACTUAL	Q	% COND	OB/XF MKT VALUE	NOTES
1	0510	GARAGE WD-	0	100	38	27	1,026.00	SF	24.85	24.85	100	1986	1986	3	20	5,099	
2	0940	SHEDS/PORT	0	100	12	10	120.00	SF	30.00	30.00	100	1998	1998	3	20	720	
3	0525	GAZEBO	0	100	0	0	1.00	UT	5,000.00	5,000.00	100	2005	2005	3	40	2,000	
4	0801	ASPHALT A	0	100	21	15	315.00	SF	3.00	3.00	100	2006	2006	3	58	548	
5	0811	CONCRETE B	0	100	32	18	576.00	SF	5.20	5.20	100	2012	2012	3	93	2,786	
6	0810	CONCRETE A	0	100	0	0	333.00	SF	6.50	6.50	100	2012	2012	3	93	2,013	
7	0500	FP-PRE FAB	0	100	0	0	1.00	UT	3,500.00	3,500.00	100	2012	2012	3	95	3,325	

LAND DESCRIPTION

TOTAL OB/XF 16,491

LN	USE CODE	CLS	LAND USE DESCRIPTION	CAP	RD	LOC ZONE	FRONT	DEPTH	TOT LND UTS	UNIT TYPE	DT	DPTH FACT	% COND	TOT ADJ	UNIT PRICE	ADJ UNIT PRICE	LAND VALUE	OTHER ADJUSTMENTS AND NOTES	YEAR	DENSITY	DECL	FRZ	YR	CONSRV
1	000115	C	SFR ACRES	100	0006	OR	0.00	0.00	2.89	AC		1.00	1.00	1.00	80,000.00	80,000.00	231,200							
2	009630	C	SWAMP	100		OR	0.00	0.00	5.43	AC		1.00	1.00	1.00	500.00	500.00	2,715							

REVIEW DATE 05/12/2019 BY KBA Total Acres: 8.32 Total Land Value: 233,915 Market: 0 Agricultural: 0 Common: 233,915 PRINTED 08/06/2024 BY SYS