LOT 198
HERON ISLES PHASE 1 REPLAT
PB 7/152

FALK GALEN G/OTERO LUCETTE
96519 COMMODORE POINT DRIVE
YULEE, FL 32097

2024

37-3N-28-0740-0198-0000

NASSAU COUNTY PROPERTY

BUILDING CHARACTERISTICS

ELEMENT	CD	CONSTRUCTION
Exterior Wall	05	AVERAGE 70
Exterior Wall	16	WD FR STUC 30
Roof Structur	03	GABLE/HIP 100
Roof Cover	03	COMP SHNGL 100
Interior Wall	05	DRYWALL 100
Interior Floo	14	CARPET 60
Interior Floo	11	CLAY TILE 40
Air Condition	03	CENTRAL 100
Heating Type	04	AIR DUCTED 100
Bedrooms		3 100
Bathrooms		2 100
Frame	02	WOOD FRAME 100
Stories	1.	1. 100
Units		0 100
Occupancy	00	NONE 100
Quality	05	Quality Level 05
DOR CODE	0100	SINGLE FAMILY
MAP NUM		MKT AREA 04
NEIGHBORHOOD/LOC	4038.00	

AREA TYPE	TOTAL GROSS AREA	PCT OF BASE	TOT ADJ AREA	SUBAREA MARKET VALUE
BAS	1,661	100	1,661	182,770
FGR	408	55	224	24,648
FOP	44	30	13	1,430
FOP	78	30	23	2,530
TOTALS	2,191		1,921	211,379

MARKET ADJUSTMENTS

TYPE	MDL	EFF. AREA	TOT ADJ PTS	EFF. BASE RATE	REPL. COST NEW	AYB	EYB	ECON	FNCT		NORM	% COND
0100	01	1,921	120.8438	114.80	220,531	2014	2014	0	0	0	4.15	95.85

1 SINGLE FAM – 100% - 2020 Heated Area: 1661 HX Base Yr 2020

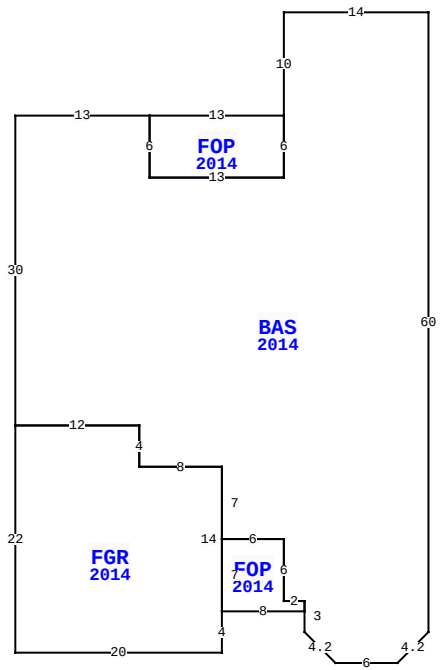

96519 COMMODORE POINT DR, YULEE

BLD DATE		LGL DATE	
XF DATE		LAND DATE	
INC DATE		AG DATE	

VALUATION SUMMARY

VALUATION BY		STANDARD
Tax Group: 4	Tax Dist:	
BUILDING MARKET VALUE		211,379
TOTAL MARKET OB/XF VALUE		4,001
TOTAL LAND VALUE - MARKET		55,000
TOTAL MARKET VALUE		270,380
SOH/AGL Deduction		85,643
ASSESSED VALUE		184,737
TOTAL EXEMPTION VALUE	HX HB	50,000
BASE TAXABLE VALUE		134,737
TOTAL JUST VALUE		270,380
NCON VALUE		0
INCOME VALUE		
PREVIOUS YEAR MKT VALUE		260,858

PERMIT NUM	DESCRIPTION	AMT	ISSUED
B1428168	CO ISSUED	0	06/16/2014
B1428168	NEW CONSTR	202,179	01/01/2014

SALES DATA

OFF RECORD Number	DATE	TYPE INST	Q U /	V I /	RSN CD	SALE PRICE
2280/1513	6/07/2019	WD	Q	I	02	205,000
GRANTOR: GOLDBERG DANIEL M						
GRANTEE: FALK GALEN G & LUCE						
1948/0110	11/14/2014	WD	Q	I	02	155,000
GRANTOR: ADVANTAGE HOME BUILDE						
GRANTEE: GOLDBERG DANIEL M						

BUILDING NOTES

BUILDING DIMENSIONS

BAS=[YR=2014] W14 S10 FOP=[YR=2014] W13 S6 E13 N6 $ S6 W13 N6 W13 S30 FGR=[YR=2014] S22 E20 N4 FOP=[YR=2014] E8 N1 W2 N6 W6 S7 $ N14 W8 N4 W12 $ E12 S4 E8 S7 E6 S6 E2 S3 D3 R3 E6 U3 R3 N60 $.

EXTRA FEATURES

LN	OB/XF CODE	DESCRIPTION	BLD	CAP	L	W	UNITS	UT	Adj R	ADJ UNIT PRICE	ORIG COND	YEAR ON	YEAR ACTUAL	Q	% COND	OB/XF MKT VALUE	NOTES
1	0810	CONCRETE A	0	100	0	0	648.00	SF	6.50	6.50	100	2014	2014	3	95	4,001	

LAND DESCRIPTION

TOTAL OB/XF 4,001

LN	USE CODE	CLS	LAND USE DESCRIPTION	CAP	RD	LOC ZONE	FRONT	DEPTH	TOT LND UTS	UNIT TYPE	DT	DPTH FACT	% COND	TOT ADJ	UNIT PRICE	ADJ UNIT PRICE	LAND VALUE	OTHER ADJUSTMENTS AND NOTES	YEAR	DENSITY	DECL	FRZ	YR	CONSRV
1	000100	C	SFR	100		PUD	0.00	0.00	1.00	LT		1.00	1.00	1.00	55,000.00	55,000.00	55,000							

REVIEW DATE 05/12/2019 BY KBA Total Acres: 0.00 Total Land Value: 55,000 Market: 0 Agricultural: 0 Common: 55,000 PRINTED 08/06/2024 BY SYS