LOT 138
IN OR 2199/1957
HERON ISLES PHASE #1 PB 7/40

MCGEE MELISSA & RONALD JR
96222 CORAL REEF ROAD
YULEE, FL 32097

2024

37-3N-28-0740-0138-0000

BUILDING CHARACTERISTICS

ELEMENT	CD	CONSTRUCTION
Exterior Wall	05	AVERAGE 90
Exterior Wall	20	FACE BRICK 10
Roof Structur	03	GABLE/HIP 100
Roof Cover	03	COMP SHNGL 100
Interior Wall	05	DRYWALL 100
Interior Floo	13	LVT/LAMNT 60
Interior Floo	14	CARPET 40
Air Condition	03	CENTRAL 100
Heating Type	04	AIR DUCTED 100
Bedrooms		4 100
Bathrooms		2.5 100
Frame	02	WOOD FRAME 100
Stories	2.	2. 100
Units		0 100
Occupancy	00	NONE 100
Quality	05	Quality Level 05
DOR CODE	0100	SINGLE FAMILY
MAP NUM		MKT AREA 04
NEIGHBORHOOD/LOC	4038.00	

AREA TYPE	TOTAL GROSS AREA	PCT OF BASE	TOT ADJ AREA	SUBAREA MARKET VALUE
BAS	956	100	956	92,946
FGR	400	55	220	21,390
FOP	100	30	30	2,917
FOP	160	30	48	4,666
FUS	1,308	100	1,308	127,170
TOTALS	2,924		2,562	249,089

MARKET ADJUSTMENTS

TYPE	MDL	EFF. AREA	TOT ADJ PTS	EFF. BASE RATE	REPL. COST NEW	AYB	EYB	ECON	FNCT		NORM	% COND
0100	01	2,562	112.4640	106.84	273,724	2005	2005	0	0	0	9.00	91.00

1 SINGLE FAM – 100% - 2019 Heated Area: 2264 HX Base Yr 2019

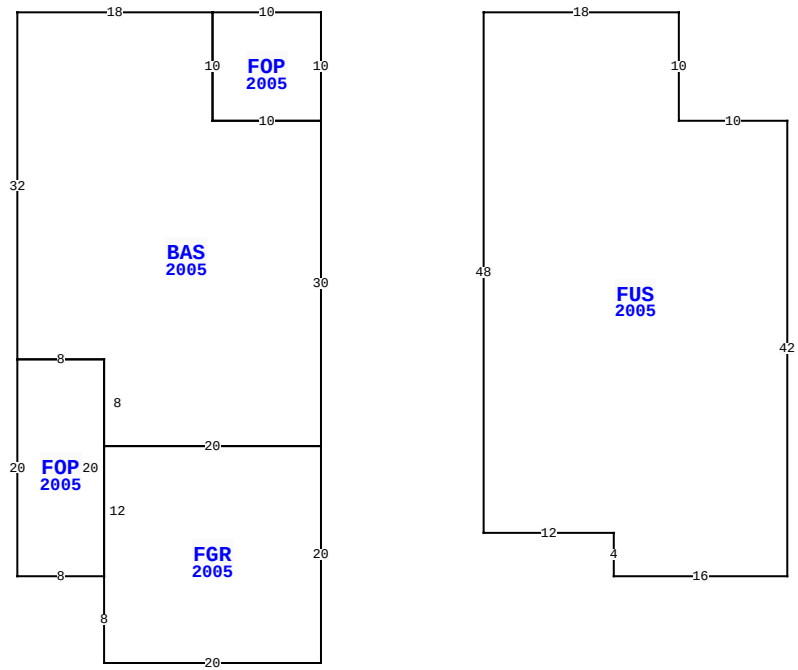

96222 CORAL REEF RD, YULEE

BLD DATE		LGL DATE	
XF DATE		LAND DATE	
INC DATE		AG DATE	

NASSAU COUNTY PROPERTY

PAGE 1 of 1 4

VALUATION SUMMARY

VALUATION BY		STANDARD
Tax Group: 4	Tax Dist:	
BUILDING MARKET VALUE		249,089
TOTAL MARKET OB/XF VALUE		3,014
TOTAL LAND VALUE - MARKET		55,000
TOTAL MARKET VALUE		307,103
SOH/AGL Deduction		103,191
ASSESSED VALUE		203,912
TOTAL EXEMPTION VALUE	HX HB	50,000
BASE TAXABLE VALUE		153,912
TOTAL JUST VALUE		307,103
NCON VALUE		0
INCOME VALUE		
PREVIOUS YEAR MKT VALUE		296,040

PERMIT NUM	DESCRIPTION	AMT	ISSUED
E15674	ELEC OTHER	2,000	09/01/2005
M10275	MECH OTHER	0	09/01/2005
P0509612	OTHER	0	06/01/2005
R07519	REPAIR/RRF	3,000	04/01/2005
B15069	NEW CONSTR	161,198	04/01/2005

SALES DATA

OFF RECORD Number	DATE	TYPE INST	Q / U	V / I	RSN CD	SALE PRICE
2199/1957	5/29/2018	WD	Q	I	01	203,000
GRANTOR: DARBY JACKIE S & MICH						
GRANTEE: MCGEE MELISSA & RON						
1364/0494	11/03/2005	WD	Q	I		160,600
GRANTOR: YOUNG AMERICAN HOMES						
GRANTEE: DARBY JACKIE S & MI						

BUILDING NOTES

BUILDING DIMENSIONS

FOP=[YR=2005] W10 BAS=[YR=2005] W18 S32 FOP=[YR=2005] S20 E8 FGR=[YR=2005] S8 E20 N20 W20 S12$ N20 W8$ E8 S8 E20 N30 W10 N10$ S10 E10 N10$ PTR= E15 FUS=[YR=2005] E18 S10 E10 S42 W16 N4 W12 N48$ W15$.

EXTRA FEATURES

LN	OB/XF CODE	DESCRIPTION	BLD	CAP	L	W	UNITS	UT	Adj R	ADJ UNIT PRICE	ORIG COND	YEAR ON	YEAR ACTUAL	Q	% COND	OB/XF MKT VALUE	NOTES
1	0811	CONCRETE B	0	100	0	0	674.00	SF	5.20	5.20	100	2005	2005	3	86	3,014	

LAND DESCRIPTION

TOTAL OB/XF 3,014

LN	USE CODE	CLS	LAND USE DESCRIPTION	CAP	RD	LOC ZONE	FRONT	DEPTH	TOT LND UTS	UNIT TYPE	DT	DPTH FACT	% COND	TOT ADJ	UNIT PRICE	ADJ UNIT PRICE	LAND VALUE	OTHER ADJUSTMENTS AND NOTES	YEAR	DENSITY	DECL	FRZ	YR	CONSRV
1	000100	C	SFR	100		PUD	0.00	0.00	1.00	LT		1.00	1.00	1.00	55,000.00	55,000.00	55,000							

REVIEW DATE 05/12/2019 BY KBA Total Acres: 0.00 Total Land Value: 55,000 Market: 0 Agricultural: 0 Common: 55,000 PRINTED 08/06/2024 BY SYS