LOT 24
IN OR 1736/1055
BELLS RIVER ESTATES #3

HORNER JEFFREY & JUDY L
97067 OVERTON CT
YULEE, FL 32097

**2024**

**37-3N-27-0136-0024-0000**

## BUILDING CHARACTERISTICS

| ELEMENT | CD | CONSTRUCTION |
|---|---|---|
| Exterior Wall | 15 | CONC BLOCK 50 |
| Exterior Wall | 16 | WD FR STUC 50 |
| Roof Structur | 03 | GABLE/HIP 100 |
| Roof Cover | 03 | COMP SHNGL 100 |
| Interior Wall | 05 | DRYWALL 100 |
| Interior Floo | 14 | CARPET 80 |
| Interior Floo | 08 | SHT VINYL 20 |
| Air Condition | 03 | CENTRAL 100 |
| Heating Type | 04 | AIR DUCTED 100 |
| Bedrooms | | 5 100 |
| Bathrooms | | 2.5 100 |
| Frame | 03 | MASONRY 100 |
| Stories | 2. | 2. 100 |
| Units | | 0 100 |
| Occupancy | 00 | NONE 100 |
| Quality | 03 | Quality Level 03 |
| DOR CODE | 0100 | SINGLE FAMILY |
| MAP NUM | | MKT AREA 04 |
| NEIGHBORHOOD/LOC | 4062.00 | |

| AREA TYPE | TOTAL GROSS AREA | PCT OF BASE | TOT ADJ AREA | SUBAREA MARKET VALUE |
|---|---|---|---|---|
| BAS | 1,256 | 100 | 1,256 | 103,014 |
| FGR | 560 | 55 | 308 | 25,261 |
| FOP | 24 | 30 | 7 | 574 |
| FSP | 180 | 40 | 72 | 5,905 |
| FUS | 1,610 | 100 | 1,610 | 132,049 |
| TOTALS | 3,630 | | 3,253 | 266,805 |

## MARKET ADJUSTMENTS

| TYPE | MDL | EFF. AREA | TOT ADJ PTS | EFF. BASE RATE | REPL. COST NEW | AYB | EYB | ECON | FNCT | | NORM | % COND |
|---|---|---|---|---|---|---|---|---|---|---|---|---|
| 0100 | 01 | 3,253 | 93.8400 | 89.15 | 290,005 | 2007 | 2007 | 0 | 0 | 0 | 8.00 | 92.00 |

1 SINGLE FAM – 100% - 2012 Heated Area: 2866 HX Base Yr 2012

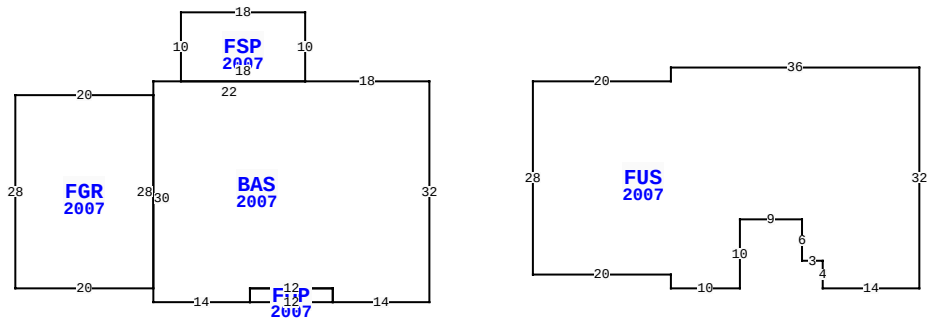


97067 OVERTON CT, YULEE

| | | | |
|---|---|---|---|
| BLD DATE | 07/03/2007 JM | LGL DATE | |
| XF DATE | 07/03/2007 JM | LAND DATE | |
| INC DATE | | AG DATE | |

## NASSAU COUNTY PROPERTY

PAGE 1 of 1 4

### VALUATION SUMMARY

| | | |
|---|---|---|
| VALUATION BY | | STANDARD |
| Tax Group: 4 | Tax Dist: | |
| BUILDING MARKET VALUE | | 266,805 |
| TOTAL MARKET OB/XF VALUE | | 59,366 |
| TOTAL LAND VALUE - MARKET | | 45,000 |
| TOTAL MARKET VALUE | | 371,171 |
| SOH/AGL Deduction | | 187,348 |
| ASSESSED VALUE | | 183,823 |
| TOTAL EXEMPTION VALUE | HX HB | 50,000 |
| BASE TAXABLE VALUE | | 133,823 |
| TOTAL JUST VALUE | | 371,171 |
| NCON VALUE | | 0 |
| INCOME VALUE | | |
| PREVIOUS YEAR MKT VALUE | | 361,268 |

| PERMIT NUM | DESCRIPTION | AMT | ISSUED |
|---|---|---|---|
| 21007670 | SCRN ENCL | 17,000 | 06/14/2021 |
| B1632777 | SWIM POOL | 0 | 08/02/2016 |
| B19923 | ADDITION | 3,000 | 05/01/2007 |
| C18373 | CO ISSUED | 229,680 | 08/01/2006 |
| B18373 | NEW CONSTR | 229,680 | 08/01/2006 |
| E17860 | ELEC OTHER | 2,000 | 08/01/2006 |

## SALES DATA

| OFF RECORD Number | DATE | TYPE INST | Q / U | V / I | RSN CD | SALE PRICE |
|---|---|---|---|---|---|---|
| 1736/1055 | 4/08/2011 | WD | U | I | 11 | 95,000 |
| GRANTOR: BAC HOME LOANS SERVIC | | | | | | |
| GRANTEE: HORNER JEFFREY & JU | | | | | | |
| 1736/1053 | 3/23/2011 | QC | U | I | 11 | 100 |
| GRANTOR: FEDERAL NATIONAL MORT | | | | | | |
| GRANTEE: BAC HOME LOANS SERV | | | | | | |

## EXTRA FEATURES

| LN | OB/XF CODE | DESCRIPTION | BLD | CAP | L | W | UNITS | UT | Adj R | ADJ UNIT PRICE | ORIG COND | YEAR ON | YEAR ACTUAL | Q | % COND | OB/XF MKT VALUE | NOTES |
|---|---|---|---|---|---|---|---|---|---|---|---|---|---|---|---|---|---|
| 1 | 0811 | CONCRETE B | 0 | 100 | 0 | 0 | 814.00 | SF | 5.20 | 5.20 | 100 | 2007 | 2007 | 3 | 88 | 3,725 | |
| 2 | 0861 | POOL GUNIT | 0 | 100 | 30 | 15 | 450.00 | SF | 85.00 | 85.00 | 100 | 2016 | 2016 | 3 | 81 | 30,983 | |
| 3 | 0855 | CONC PAVER | 0 | 100 | 0 | 0 | 585.00 | SF | 10.00 | 10.00 | 100 | 2016 | 2016 | 3 | 96 | 5,616 | |
| 4 | 0911 | SCRN RM A | 0 | 100 | 45 | 26 | 1,170.00 | SF | 17.50 | 17.50 | 100 | 2021 | 2021 | 3 | 93 | 19,042 | |

## BUILDING NOTES

## BUILDING DIMENSIONS

BAS=[YR=2007] W18 FSP=[YR=2007] N10 W18 S10 E18$ W22 S2 FGR=[YR=2007] W20 S28 E20 N28$ S30 E14 FOP=[YR=2007] E12 N2 W12 S2$ N2 E12 S2 E14 N32$ PTR=E15 FUS=[YR=2007] E20 N2 E36 S32 W14 N4 W3 N6 W9 S10 W10 N2 W20 N28$ W15$.

## LAND DESCRIPTION

TOTAL OB/XF 59,366

| LN | USE CODE | CLS | LAND USE DESCRIPTION | CAP | RD | LOC ZONE | FRONT | DEPTH | TOT LND UTS | UNIT TYPE | DT | DPTH FACT | % COND | TOT ADJ | UNIT PRICE | ADJ UNIT PRICE | LAND VALUE | OTHER ADJUSTMENTS AND NOTES | YEAR | DENSITY | DECL | FRZ | YR | CONSRV |
|---|---|---|---|---|---|---|---|---|---|---|---|---|---|---|---|---|---|---|---|---|---|---|---|---|
| 1 | 000100 | C | SFR | 100 | 0003 | PUD | 0.00 | 0.00 | 1.00 | LT | | 1.00 | 1.00 | 1.00 | 45,000.00 | 45,000.00 | 45,000 | | | | | | | |

REVIEW DATE 10/12/2021 BY NW Total Acres: 0.00 Total Land Value: 45,000 Market: 0 Agricultural: 0 Common: 45,000 PRINTED 08/06/2024 BY SYS