LOTS 221 & SLY 1/2 OF 222
IN OR 2064/1369
ESMT PT OR 493/636

DAVID FASHINGBAUER TRUST/FASHINGBAUER DAVID J TRUS
93010 MARSH LANDING
FERNANDINA BEACH, FL 32034

2024

37-2N-28-5000-0221-0000

NASSAU COUNTY PROPERTY

BUILDING CHARACTERISTICS

ELEMENT	CD	CONSTRUCTION
Exterior Wall	12	CEDAR 100
Roof Structur	08	IRREGULAR 100
Roof Cover	03	COMP SHNGL 100
Interior Wall	05	DRYWALL 70
Interior Wall	06	CUST PANEL 30
Interior Floo	12	HARDWOOD 100
Air Condition	03	CENTRAL 100
Heating Type	04	AIR DUCTED 100
Bedrooms		3 100
Bathrooms		2 100
Frame	02	WOOD FRAME 100
Stories	2.	2. 100
Units		0 100
Occupancy	00	NONE 100
Quality	04	Quality Level 04
DOR CODE	0100	SINGLE FAMILY
MAP NUM		MKT AREA 04
NEIGHBORHOOD/LOC	4016.00	

AREA TYPE	TOTAL GROSS AREA	PCT OF BASE	TOT ADJ AREA	SUBAREA MARKET VALUE
BAS	1,500	100	1,500	191,776
FGR	484	55	266	34,008
FOP	40	30	12	1,534
FOP	400	30	120	15,342
FOP	400	30	120	15,342
FST	120	55	66	8,438
FUS	1,200	100	1,200	153,421
UOP	140	20	28	3,580
TOTALS	4,284		3,312	423,442

MARKET ADJUSTMENTS

TYPE	MDL	EFF. AREA	TOT ADJ PTS	EFF. BASE RATE	REPL. COST NEW	AYB	EYB	ECON	FNCT		NORM	% COND
0900	01	3,312	114.2778	142.85	473,119	1990	2002	0	0	0	10.50	89.50

1 SNGL FAM – 100% - 2001 Heated Area: 2700 HX Base Yr 2001

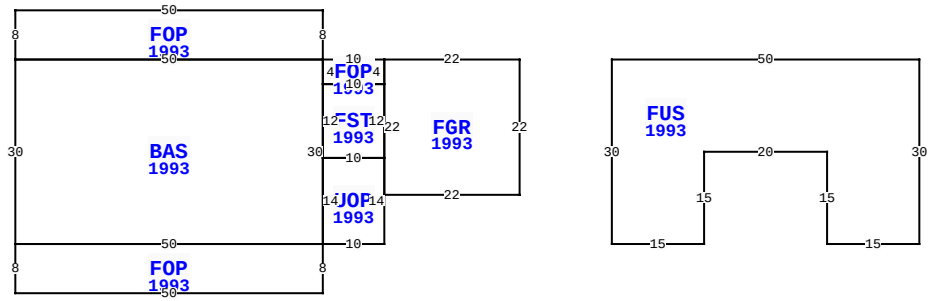

93010 MARSH LANDING, FERNANDINA BEACH

BLD DATE		LGL DATE	
XF DATE		LAND DATE	03/22/2024 MLU
INC DATE		AG DATE	

NASSAU COUNTY PROPERTY — VALUATION SUMMARY

VALUATION BY		STANDARD
Tax Group: 7	Tax Dist:	
BUILDING MARKET VALUE		423,442
TOTAL MARKET OB/XF VALUE		34,002
TOTAL LAND VALUE - MARKET		307,500
TOTAL MARKET VALUE		764,944
SOH/AGL Deduction		407,718
ASSESSED VALUE		357,226
TOTAL EXEMPTION VALUE	HX HB	50,000
BASE TAXABLE VALUE		307,226
TOTAL JUST VALUE		764,944
NCON VALUE		0
INCOME VALUE		
PREVIOUS YEAR MKT VALUE		634,902

PERMIT NUM	DESCRIPTION	AMT	ISSUED
B2108800	REPAIR/RRF	7,840	08/01/2021

SALES DATA

OFF RECORD Number	DATE	TYPE INST	Q / U	V / I	RSN CD	SALE PRICE
2064/1369	10/28/2015	WD	U	I	11	100
GRANTOR: FASHINGBAUER DAVID JO						
GRANTEE: DAVID FASHINGBAUER						
0956/1043	11/01/2000	WD	Q	I		267,000
GRANTOR: ROBINSON MARY W & ROB						
GRANTEE: FASHINGBAUER DAVID						

BUILDING NOTES

BUILDING DIMENSIONS

FGR=[YR=1993] W22 FOP=[YR=1993] W10 FOP=[YR=1993] N8 W50 S8 BAS=[YR=1993] S30 FOP=[YR=1993] S8 E50 N8UOP=[YR=1993] E10 N14 FST=[YR=1993] N12 W10 S12 E10 $ W10 S14 $ W50 $ E50 N30 W50 $ E50 $ S4 E10 N4 $ S22 E22 N22 $ PTR= E15 FUS=[YR=1993] E50 S30 W15 N15 W20 S15 W15 N30 $ W15 $.

EXTRA FEATURES

LN	OB/XF CODE	DESCRIPTION	BLD	CAP	L	W	UNITS	UT	Adj R	ADJ UNIT PRICE	ORIG COND	YEAR ON	YEAR ACTUAL	Q	% COND	OB/XF MKT VALUE	NOTES
1	0500	FP-PRE FAB	0	100	0	0	1.00	UT	3,500.00	3,500.00	100	1990	1990	3	68	2,380	
2	0810	CONCRETE A	0	100	24	18	432.00	SF	6.50	6.50	100	1991	1991	3	62	1,741	
3	1242	WD DECK A	0	100	4	4	16.00	SF	10.00	10.00	100	1990	1990	3	20	32	
4	1242	WD DECK A	0	100	5	3	15.00	SF	10.00	10.00	100	1990	1990	3	20	30	
5	1242	WD DECK A	0	100	4	4	16.00	SF	10.00	10.00	100	1990	1990	3	20	32	
6	1242	WD DECK A	0	100	4	4	16.00	SF	10.00	10.00	100	1990	1990	3	20	32	
7	0940	SHEDS/PORT	0	100	10	16	160.00	SF	30.00	30.00	100	2004	2004	3	22	1,056	
8	0803	ASPHALT C	0	100	0	0	5,462.00	SF	2.00	2.00	100	2004	2004	3	54	5,899	
9	0300	BOAT DCK W	0	100	0	0	800.00	SF	40.00	40.00	100	2010	2010	3	60	19,200	
10	0525	GAZEBO	0	100	0	0	1.00	UT	10,000.00	10,000.00	100	2004	2004	3	36	3,600	

TOTAL OB/XF 34,002

LAND DESCRIPTION

LN	USE CODE	CLS	LAND USE DESCRIPTION	CAP	RD	LOC ZONE	FRONT	DEPTH	TOT LND UTS	UNIT TYPE	DT	DPTH FACT	% COND	TOT ADJ	UNIT PRICE	ADJ UNIT PRICE	LAND VALUE	OTHER ADJUSTMENTS AND NOTES	YEAR	DENSITY	DECL	FRZ	YR	CONSRV
1	000116	C	SFR MARSH	100		RSF-1	0.00	0.00	1.00	LT		1.00	1.00	1.50	205,000.00	307,500.00	307,500							

REVIEW DATE 03/23/2022 BY KWA Total Acres: 0.00 Total Land Value: 307,500 Market: 0 Agricultural: 0 Common: 307,500 PRINTED 08/06/2024 BY SYS