LOT 204
PINEY ISLAND I PB 4/69

GORDON JONATHAN DALES/WITT AUTUMN LEE
91001 FIDDLER DRIVE
FERNANDINA BEACH, FL 32034

2024

37-2N-28-5000-0204-0000

BUILDING CHARACTERISTICS

ELEMENT	CD	CONSTRUCTION
Exterior Wall	12	CEDAR 100
Roof Structur	08	IRREGULAR 100
Roof Cover	03	COMP SHNGL 100
Interior Wall	05	DRYWALL 100
Interior Floo	11	CLAY TILE 50
Interior Floo	12	HARDWOOD 50
Air Condition	03	CENTRAL 100
Heating Type	04	AIR DUCTED 100
Bedrooms		4 100
Bathrooms		2.5 100
Frame	02	WOOD FRAME 100
Stories	2.	2. 100
Units		0 100
Occupancy	00	NONE 100
Quality	03	Quality Level 03
DOR CODE	0100	SINGLE FAMILY
MAP NUM		MKT AREA 04
NEIGHBORHOOD/LOC	4016.00	

AREA TYPE	TOTAL GROSS AREA	PCT OF BASE	TOT ADJ AREA	SUBAREA MARKET VALUE
BAS	2,084	100	2,084	299,642
FOP	512	30	154	22,142
FSP	400	40	160	23,005
FUS	1,405	100	1,405	202,013
UOP	64	20	13	1,869
UOP	64	20	13	1,869
UOP	80	20	16	2,300
TOTALS	4,609		3,845	552,841

MARKET ADJUSTMENTS

TYPE	MDL	EFF. AREA	TOT ADJ PTS	EFF. BASE RATE	REPL. COST NEW	AYB	EYB	ECON	FNCT		NORM	% COND
0500	01	3,845	107.1000	160.65	617,699	1992	2002	0	0	0	10.50	89.50

1 SFR CUST – 100% - 2024 Heated Area: 3489 HX Base Yr 2024

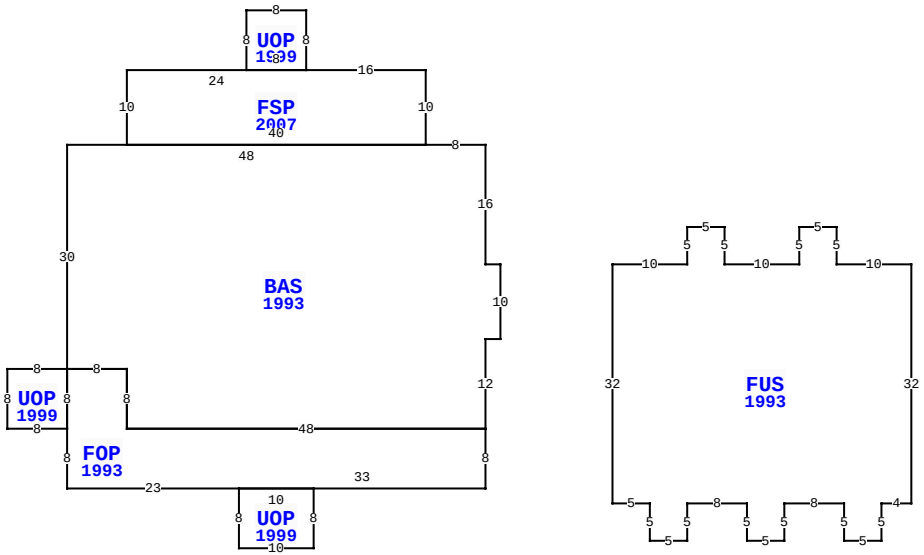

91001 FIDDLER DR, FERNANDINA BEACH

BLD DATE		LGL DATE	
XF DATE		LAND DATE	
INC DATE		AG DATE	

NASSAU COUNTY PROPERTY

PAGE 1 of 2 7

VALUATION SUMMARY

VALUATION BY		STANDARD
Tax Group: 7	Tax Dist:	
BUILDING MARKET VALUE		567,579
TOTAL MARKET OB/XF VALUE		74,195
TOTAL LAND VALUE - MARKET		307,500
TOTAL MARKET VALUE		949,274
SOH/AGL Deduction		49,041
ASSESSED VALUE		900,233
TOTAL EXEMPTION VALUE	HX HB	50,000
BASE TAXABLE VALUE		850,233
TOTAL JUST VALUE		949,274
NCON VALUE		0
INCOME VALUE		
PREVIOUS YEAR MKT VALUE		794,309

PERMIT NUM	DESCRIPTION	AMT	ISSUED
007011	DEMOLITION	0	03/01/2000
95-1862	GARAGE	25,000	05/01/1995
0179	FOUNDATION	2,000	04/01/1993
7738	NEW CONSTR	107,900	12/18/1991

SALES DATA

OFF RECORD Number	DATE	TYPE INST	Q / U	V / I	RSN CD	SALE PRICE
2628/0626	3/30/2023	WD	Q	I	02	1,080,000
GRANTOR: SLEBOS JOY						
GRANTEE: GORDON HONATHAN DAL						
2342/1568	2/18/2020	WD	U	I	11	100
GRANTOR: HENRY RICHARD J LIVIN						
GRANTEE: HENRY RICHARD J L/E						

BUILDING NOTES

BUILDING DIMENSIONS

BAS=[YR=1993] W2 N16 W8 FSP=[YR=2007] N10 W16 UOP=[YR=1999] N8 W8 S8 E8 $ W24 S10 E40 $ W48 S30 UOP=[YR=1999] W8 S8 E8 FOP=[YR=1993] S8 E23 UOP=[YR=1999] S8 E10 N8 W10 $ E33 N8 W48 N8 W8 S8 $ N8 $ E8 S8 E48 N12 E2 N10 $ PTR= E15 FUS=[YR=1993] E10 N5 E5 S5 E10 N5 E5 S5 E10 S32 W4 S5 W5 N5 W8 S5 W5 N5 W8 S5 W5 N5 W5 N32 $ W15 $.

EXTRA FEATURES

LN	OB/XF CODE	DESCRIPTION	BLD	CAP	L	W	UNITS	UT	Adj R	ADJ UNIT PRICE	ORIG COND	YEAR ON	YEAR ACTUAL	Q	% COND	OB/XF MKT VALUE	NOTES
1	0825	BRICK	0	100	8	9	72.00	SF	12.50	12.50	100	1993	1993	3	89	801	
2	0500	FP-PRE FAB	0	100	0	0	1.00	UT	3,500.00	3,500.00	100	1992	1992	3	72	2,520	
3	0300	BOAT DCK W	0	100	0	0	615.00	SF	40.00	40.00	100	1995	1995	3	78	19,188	
4	1242	WD DECK A	0	100	7	3	21.00	SF	10.00	10.00	100	1992	1992	3	20	42	
5	1127	BRICK 8"	0	100	118	7	826.00	SF	11.00	11.00	100	1997	1997	3	92	8,359	
6	0855	CONC PAVER	0	100	0	0	5,153.00	SF	10.00	10.00	100	2004	2004	3	84	43,285	

LAND DESCRIPTION

TOTAL OB/XF 74,195

LN	USE CODE	CLS	LAND USE DESCRIPTION	CAP	RD	LOC ZONE	FRONT	DEPTH	TOT LND UTS	UNIT TYPE	DT	DPTH FACT	% COND	TOT ADJ	UNIT PRICE	ADJ UNIT PRICE	LAND VALUE	OTHER ADJUSTMENTS AND NOTES	YEAR	DENSITY	DECL	FRZ	YR	CONSRV
1	000116	C	SFR MARSH	100		RSF-1	0.00	0.00	1.00	LT		1.00	1.00	1.50	205,000.00	307,500.00	307,500							

REVIEW DATE 05/24/2023 BY NW Total Acres: 0.00 Total Land Value: 307,500 Market: 0 Agricultural: 0 Common: 307,500 PRINTED 08/06/2024 BY SYS

LOT 204
PINEY ISLAND I PB 4/69

GORDON JONATHAN DALES/WITT AUTUMN LEE
91001 FIDDLER DRIVE
FERNANDINA BEACH, FL 32034

2024

37-2N-28-5000-0204-0000

BUILDING CHARACTERISTICS

ELEMENT	CD	CONSTRUCTION
Exterior Wall	12	CEDAR 100
Roof Structur	08	IRREGULAR 100
Roof Cover	03	COMP SHNGL 100
Interior Wall	07	NONE 100
Interior Floo	03	CONC FINSH 100
Air Condition	01	NONE 100
Heating Type	01	NONE 100
Bedrooms		0 100
Bathrooms		0 100
Frame	02	WOOD FRAME 100
Stories	2.	2. 100
Units		0 100
Occupancy	00	NONE 100
Quality	06	Quality Level 06

DOR CODE	0100	SINGLE FAMILY	
MAP NUM		MKT AREA	04
NEIGHBORHOOD/LOC	4016.00		

AREA TYPE	TOTAL GROSS AREA	PCT OF BASE	TOT ADJ AREA	SUBAREA MARKET VALUE
BAS	960	100	960	11,880
FOP	18	30	5	62
UOP	51	20	10	124
UST	480	45	216	2,673
TOTALS	1,509		1,191	14,738

MARKET ADJUSTMENTS

TYPE	MDL	EFF. AREA	TOT ADJ PTS	EFF. BASE RATE	REPL. COST NEW	AYB	EYB	ECON	FNCT		NORM	% COND
6500	01	1,191	70.7020	24.75	29,477	1995	1995	0	0	0	50.00	50.00

2 GARAGE RES – 100% - 2024 Heated Area: 960 HX Base Yr 2024

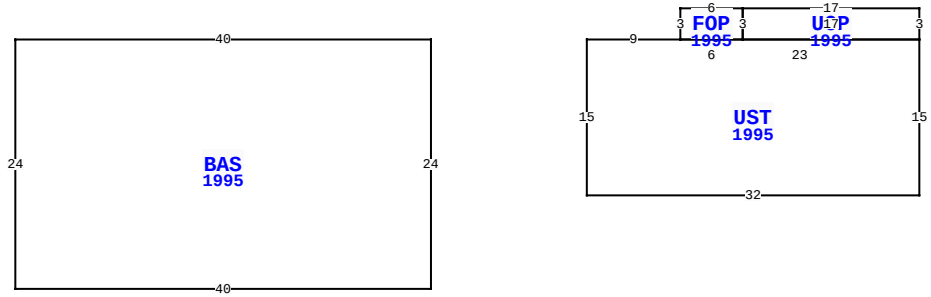

91001 FIDDLER DR, FERNANDINA BEACH

BLD DATE		LGL DATE	
XF DATE		LAND DATE	
INC DATE		AG DATE	

NASSAU COUNTY PROPERTY

PAGE 2 of 2 7

VALUATION SUMMARY

VALUATION BY		STANDARD
Tax Group: 7	Tax Dist:	
BUILDING MARKET VALUE		567,579
TOTAL MARKET OB/XF VALUE		74,195
TOTAL LAND VALUE - MARKET		307,500
TOTAL MARKET VALUE		949,274
SOH/AGL Deduction		49,041
ASSESSED VALUE		900,233
TOTAL EXEMPTION VALUE	HX HB	50,000
BASE TAXABLE VALUE		850,233
TOTAL JUST VALUE		949,274
NCON VALUE		0
INCOME VALUE		
PREVIOUS YEAR MKT VALUE		794,309

PERMIT NUM	DESCRIPTION	AMT	ISSUED

SALES DATA

OFF RECORD Number	DATE	TYPE INST	Q / U	V / I	RSN CD	SALE PRICE
2628/0626	3/30/2023	WD	Q	I	02	1,080,000
GRANTOR: SLEBOS JOY						
GRANTEE: GORDON HONATHAN DAL						
2342/1568	2/18/2020	WD	U	I	11	100
GRANTOR: HENRY RICHARD J LIVIN						
GRANTEE: HENRY RICHARD J L/E						

BUILDING NOTES

BUILDING DIMENSIONS

BAS=[YR=1995] W40 S24 E40 N24 PTR= E15 UST=[YR=1995] E9
FOP=[YR=1995] N3 E6 UOP=[YR=1995] E17 S3 W17 N3 $ S3 W6 $
E23 S15 W32 N15 $ W15 $.

EXTRA FEATURES

L N	OB/XF CODE	DESCRIPTION	BLD	CAP	L	W	UNITS	UT	Adj R	ADJ UNIT PRICE	ORIG COND	YEAR ON	YEAR ACTUAL	Q	% COND	OB/XF MKT VALUE	NOTES

LAND DESCRIPTION

TOTAL OB/XF 0

L N	USE CODE	CLS	LAND USE DESCRIPTION	CAP	R D	LOC ZONE	FRONT	DEPTH	TOT LND UTS	UNIT TYPE	D T	DPTH FACT	% COND	TOT ADJ	UNIT PRICE	ADJ UNIT PRICE	LAND VALUE	OTHER ADJUSTMENTS AND NOTES	YEAR	DENSITY	DECL	FRZ	YR	CONSRV

REVIEW DATE 05/24/2023 BY NW Total Acres: 0.00 Total Land Value: 307,500 Market: 0 Agricultural: 0 Common: 307,500 PRINTED 08/06/2024 BY SYS