LOT 63
PINEY ISLAND II PB 4/97

HORD FAMILY TRUST/HORD MAX A TRUSTEE
96078 PINEY ISLAND DR
FERNANDINA BEACH, FL 32034

2024

37-2N-28-5000-0063-0000

BUILDING CHARACTERISTICS

ELEMENT	CD	CONSTRUCTION
Exterior Wall	30	VINYL 90
Exterior Wall	20	FACE BRICK 10
Roof Structur	08	IRREGULAR 100
Roof Cover	03	COMP SHNGL 100
Interior Wall	05	DRYWALL 100
Interior Floo	14	CARPET 60
Interior Floo	12	HARDWOOD 40
Air Condition	03	CENTRAL 100
Heating Type	04	AIR DUCTED 100
Bedrooms		3 100
Bathrooms		2.5 100
Frame	02	WOOD FRAME 100
Stories	1.	1. 100
Units		0 100
Occupancy	00	NONE 100
Quality	03	Quality Level 03
DOR CODE	0100	SINGLE FAMILY
MAP NUM		MKT AREA 04
NEIGHBORHOOD/LOC	4016.00	

AREA TYPE	TOTAL GROSS AREA	PCT OF BASE	TOT ADJ AREA	SUBAREA MARKET VALUE
BAS	2,052	100	2,052	287,298
FGR	504	55	277	38,782
FOP	248	30	74	10,360
FOP	378	30	113	15,821
STR	36	10	4	560
STR	66	10	7	980
TOTALS	3,284		2,527	353,801

MARKET ADJUSTMENTS

TYPE	MDL	EFF. AREA	TOT ADJ PTS	EFF. BASE RATE	REPL. COST NEW	AYB	EYB	ECON	FNCT		NORM	% COND
0500	01	2,527	105.8880	158.83	401,363	1994	2000	0	0	0	11.85	88.15

1 SFR CUST – 100% - 1995 Heated Area: 2052 HX Base Yr 1995

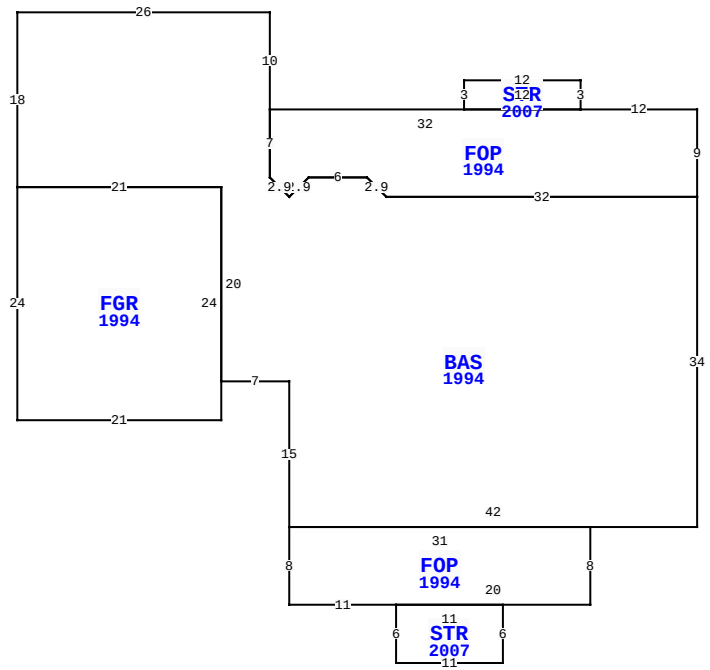

96078 PINEY ISLAND DR, FERNANDINA BEACH

BLD DATE		LGL DATE	
XF DATE		LAND DATE	05/24/2023 MLU
INC DATE		AG DATE	

NASSAU COUNTY PROPERTY

VALUATION SUMMARY

VALUATION BY		STANDARD
Tax Group: 7	Tax Dist:	
BUILDING MARKET VALUE		353,801
TOTAL MARKET OB/XF VALUE		6,905
TOTAL LAND VALUE - MARKET		175,000
TOTAL MARKET VALUE		535,706
SOH/AGL Deduction		291,693
ASSESSED VALUE		244,013
TOTAL EXEMPTION VALUE	HX HB	50,000
BASE TAXABLE VALUE		194,013
TOTAL JUST VALUE		535,706
NCON VALUE		0
INCOME VALUE		
PREVIOUS YEAR MKT VALUE		477,904

PERMIT NUM	DESCRIPTION	AMT	ISSUED

SALES DATA

OFF RECORD Number	DATE	TYPE INST	Q U	V I	RSN CD	SALE PRICE
2420/0059	12/21/2020	WD	U	I	11	100
GRANTOR: HORD MAX A & JOANN B						
GRANTEE: HORD FAMILY TRUST						
0503/0437	11/01/1986	WD	Q	V		15,000
GRANTOR:						
GRANTEE:						

BUILDING NOTES

BUILDING DIMENSIONS

FOP=[YR=1994] W12 STR=[YR=2007] N3 W12 S3 E12 $ W32
BAS=[YR=1994] N10 W26 S18 FGR=[YR=1994] S24 E21 N24 W21 $
E21 S20 E7 S15 FOP=[YR=1994] S8 E11 STR=[YR=2007] S6 E11 N6
W11 $ E20 N8 W31 $ E42 N34 W32 U2 L2 W6 D2 L2 L2 U2 N7$
S7 R2 D2 R2 U2 E6 R2 D2 E32 N9$.

EXTRA FEATURES

LN	OB/XF CODE	DESCRIPTION	BLD	CAP	L	W	UNITS	UT	Adj R	ADJ UNIT PRICE	ORIG COND	YEAR ON	YEAR ACTUAL	Q	% COND	OB/XF MKT VALUE	NOTES
1	0812	CONCRETE C	0	100	0	0	1,502.00	SF	4.00	4.00	100	1994	1994	3	68	4,085	
2	0500	FP-PRE FAB	0	100	0	0	1.00	UT	3,500.00	3,500.00	100	1994	1994	3	76	2,660	
3	0810	CONCRETE A	0	100	8	4	32.00	SF	6.50	6.50	100	1999	1999	3	77	160	

LAND DESCRIPTION

TOTAL OB/XF 6,905

LN	USE CODE	CLS	LAND USE DESCRIPTION	CAP	RD	LOC ZONE	FRONT	DEPTH	TOT LND UTS	UNIT TYPE	DT	DPTH FACT	% COND	TOT ADJ	UNIT PRICE	ADJ UNIT PRICE	LAND VALUE	OTHER ADJUSTMENTS AND NOTES	YEAR	DENSITY	DECL	FRZ	YR	CONSRV
1	000116	C	SFR MARSH	100		RSF-1	0.00	0.00	1.00	LT		1.00	1.00	1.00	175,000.00	175,000.00	175,000							

REVIEW DATE 05/16/2022 BY KWA Total Acres: 0.00 Total Land Value: 175,000 Market: 0 Agricultural: 0 Common: 175,000 PRINTED 08/06/2024 BY SYS