LOT 39 & W20 FT OF LOT 40 &
PT OF TRACT A
IN OR 305/281

TOMPKINS MARY L
95021 PINEY ISLAND COURT
FERNANDINA BEACH, FL 32034

2024

37-2N-28-5000-0039-0000

BUILDING CHARACTERISTICS

ELEMENT	CD	CONSTRUCTION
Exterior Wall	19	COMMON BRK 100
Roof Structur	03	GABLE/HIP 100
Roof Cover	03	COMP SHNGL 100
Interior Wall	05	DRYWALL 100
Interior Floo	14	CARPET 80
Interior Floo	12	HARDWOOD 20
Air Condition	03	CENTRAL 100
Heating Type	04	AIR DUCTED 100
Bedrooms		4 100
Bathrooms		3 100
Frame	02	WOOD FRAME 100
Stories	1.	1. 100
Units		0 100
BUD8 Adjustme	04	DIST 01 100
Occupancy	00	NONE 100
Quality	02	Quality Level 02
DOR CODE	0100	SINGLE FAMILY
MAP NUM		MKT AREA 04
NEIGHBORHOOD/LOC	4016.00	

AREA TYPE	TOTAL GROSS AREA	PCT OF BASE	TOT ADJ AREA	SUBAREA MARKET VALUE
BAS	2,426	100	2,426	67,161
DCK	525	10	52	1,440
FGR	525	55	289	8,001
FOP	40	30	12	332
FSP	255	40	102	2,824
UOP	96	20	19	526
TOTALS	3,867		2,900	80,284

MARKET ADJUSTMENTS

TYPE	MDL	EFF. AREA	TOT ADJ PTS	EFF. BASE RATE	REPL. COST NEW	AYB	EYB	ECON	FNCT	HM	NORM	% COND
0900	01	2,900	110.7320	138.42	401,418	1979	1979	0	0	60	32.00	20.00

1 SNGL FAM – 0% - 0 Heated Area: 2426 HX Base Yr

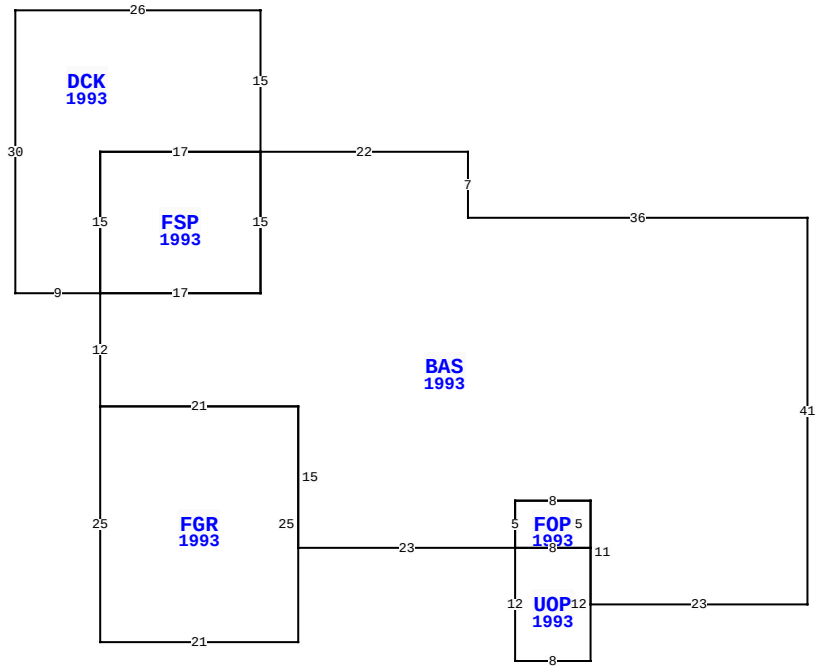

95021 PINEY ISLAND CT, FERNANDINA BEACH

BLD DATE	03/03/2023 NW	LGL DATE	
XF DATE		LAND DATE	05/24/2023 MLU
INC DATE		AG DATE	

NASSAU COUNTY PROPERTY

PAGE 1 of 1 7

VALUATION SUMMARY

VALUATION BY	STANDARD
Tax Group: 7	Tax Dist:
BUILDING MARKET VALUE	12,000
TOTAL MARKET OB/XF VALUE	4,681
TOTAL LAND VALUE - MARKET	425,000
TOTAL MARKET VALUE	441,681
SOH/AGL Deduction	123,416
ASSESSED VALUE	318,265
TOTAL EXEMPTION VALUE	0
BASE TAXABLE VALUE	318,265
TOTAL JUST VALUE	441,681
NCON VALUE	0
INCOME VALUE	
PREVIOUS YEAR MKT VALUE	335,431

PERMIT NUM	DESCRIPTION	AMT	ISSUED
B240004531	DEMO OF 1979 BRIC	12,000	04/19/2024
94 0243	REPAIR/RRF	2,860	10/01/1994

SALES DATA

OFF RECORD Number	DATE	TYPE INST	Q U /	V I /	RSN CD	SALE PRICE
0305/0281	11/01/1979	WD	U	I		61,400

GRANTOR:

GRANTEE:

BUILDING NOTES

BUILDING DIMENSIONS

BAS=[YR=1993] W36 N7 W22 DCK=[YR=1993] N15 W26 S30 E9 N15 E17 $ FSP=[YR=1993] W17 S15 E17 N15 $ S15 W17 S12 FGR=[YR=1993] S25 E21 N25 W21 $ E21 S15 E23 UOP=[YR=1993] S12 E8 N12 FOP=[YR=1993] N5 W8 S5 E8 $ W8 $ N5 E8 S11 E23 N41 $.

EXTRA FEATURES

LN	OB/XF CODE	DESCRIPTION	BLD	CAP	L	W	UNITS	UT	Adj R	ADJ UNIT PRICE	ORIG COND	YEAR ON	YEAR ACTUAL	Q	% COND	OB/XF MKT VALUE	NOTES
1	0812	CONCRETE C	0	0	0	0	2,283.00	SF	4.00	4.00	50	1987	1987	3	20	1,826	
2	0812	CONCRETE C	0	0	0	0	3,349.00	SF	4.00	4.00	50	1980	1980	3	20	2,679	
3	0751	UOP	0	0	22	8	176.00	SF	5.00	5.00	100	1985	1985	3	20	176	

LAND DESCRIPTION

TOTAL OB/XF 4,681

LN	USE CODE	CLS	LAND USE DESCRIPTION	CAP	RD	LOC ZONE	FRONT	DEPTH	TOT LND UTS	UNIT TYPE	DT	DPTH FACT	% COND	TOT ADJ	UNIT PRICE	ADJ UNIT PRICE	LAND VALUE	OTHER ADJUSTMENTS AND NOTES	YEAR	DENSITY	DECL	FRZ	YR	CONSRV
1	000130	C	SFR WATER	0		RSF-1	0.00	0.00	1.00	LT		1.00	1.00	1.00	425,000.00	425,000.00	425,000							

REVIEW DATE 06/10/2024 BY NW Total Acres: 0.00 Total Land Value: 425,000 Market: 0 Agricultural: 0 Common: 425,000 PRINTED 08/06/2024 BY SYS