LOT 25
PINEY ISLAND II PB 4/97

SELL JEFFREY C & KATRINA
94083 LIMPKIN LANE
FERNANDINA BEACH, FL 32034

2024

37-2N-28-5000-0025-0000

NASSAU COUNTY PROPERTY

BUILDING CHARACTERISTICS

ELEMENT	CD	CONSTRUCTION
Exterior Wall	05	AVERAGE 100
Roof Structur	08	IRREGULAR 100
Roof Cover	03	COMP SHNGL 100
Interior Wall	05	DRYWALL 100
Interior Floo	14	CARPET 80
Interior Floo	11	CLAY TILE 20
Air Condition	03	CENTRAL 100
Heating Type	04	AIR DUCTED 100
Bedrooms		5 100
Bathrooms		3 100
Frame	02	WOOD FRAME 100
Stories	2.	2. 100
Units		0 100
Occupancy	00	NONE 100
Quality	04	Quality Level 04

DOR CODE 0100 SINGLE FAMILY
MAP NUM | MKT AREA 04
NEIGHBORHOOD/LOC 4016.00

AREA TYPE	TOTAL GROSS AREA	PCT OF BASE	TOT ADJ AREA	SUBAREA MARKET VALUE
BAS	1,808	100	1,808	201,586
DCK	306	10	31	3,457
FGR	576	55	317	35,345
FOP	296	30	89	9,923
FUS	1,184	100	1,184	132,012
TOTALS	4,170		3,429	382,321

MARKET ADJUSTMENTS

TYPE	MDL	EFF. AREA	TOT ADJ PTS	EFF. BASE RATE	REPL. COST NEW	AYB	EYB	ECON	FNCT		NORM	% COND
0900	01	3,429	105.8736	132.34	453,794	1989	1989	0	0	0	15.75	84.25

1 SNGL FAM – 0% - 2024 Heated Area: 2992 HX Base Yr

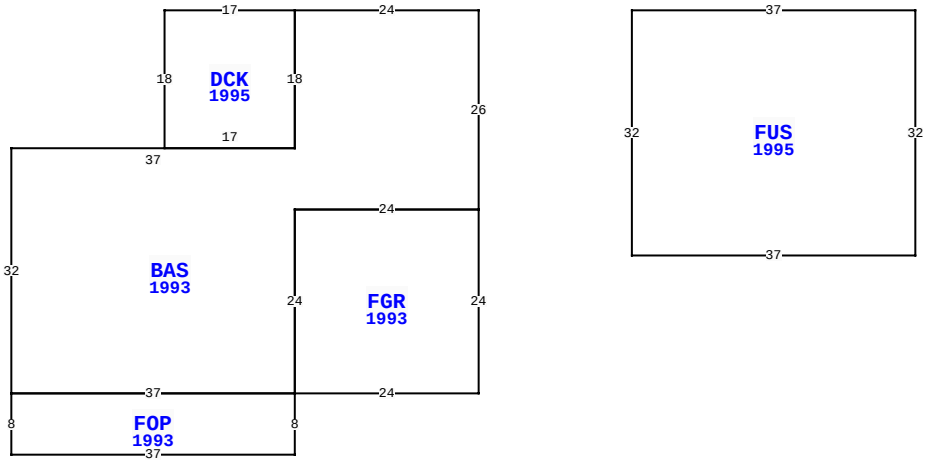

94083 LIMPKIN LN, FERNANDINA BEACH

BLD DATE		LGL DATE	
XF DATE		LAND DATE	03/22/2024 MLU
INC DATE		AG DATE	

VALUATION SUMMARY

VALUATION BY	STANDARD
Tax Group: 7	Tax Dist:
BUILDING MARKET VALUE	382,321
TOTAL MARKET OB/XF VALUE	6,239
TOTAL LAND VALUE - MARKET	150,000
TOTAL MARKET VALUE	538,560
SOH/AGL Deduction	0
ASSESSED VALUE	538,560
TOTAL EXEMPTION VALUE	0
BASE TAXABLE VALUE	538,560
TOTAL JUST VALUE	538,560
NCON VALUE	0
INCOME VALUE	
PREVIOUS YEAR MKT VALUE	513,113

PERMIT NUM	DESCRIPTION	AMT	ISSUED
94 01552	NEW CONSTR	41,660	12/01/1994
8669	REMODEL	76,603	02/03/1993

SALES DATA

OFF RECORD Number	DATE	TYPE INST	Q / U	V / I	RSN CD	SALE PRICE
2617/0417	2/01/2023	WD	U	I	30	135,000
GRANTOR: SELL STEVEN W TRUSTEE						
GRANTEE: SELL JEFFREY C & KA						
1872/0416	8/09/2013	WD	Q	I	02	235,000
GRANTOR: LAWHORNE SCOTT W & SU						
GRANTEE: SELL STEVEN W TRUST						

EXTRA FEATURES

L N	OB/XF CODE	DESCRIPTION	BLD	CAP	L	W	UNITS	UT	Adj R	ADJ UNIT PRICE	ORIG COND	YEAR ON	YEAR ACTUAL	Q	% COND	OB/XF MKT VALUE	NOTES
1	0812	CONCRETE C	0	0	0	0	2,462.00	SF	2.80	2.80	100	1989	1989	3	57	3,929	
2	0500	FP-PRE FAB	0	0	0	0	1.00	UT	3,500.00	3,500.00	100	1989	1989	3	66	2,310	

BUILDING NOTES

BUILDING DIMENSIONS

BAS=[YR=1993] W24 DCK=[YR=1995] W17 S18 E17 N18$ S18 W37 S32 FOP=[YR=1993] S8 E37 N8 FGR=[YR=1993] E24 N24 W24 S24$ W37$ E37 N24 E24 N26$ PTR=E20 FUS=[YR=1995] E37 S32 W37 N32$ W20$.

LAND DESCRIPTION

TOTAL OB/XF 6,239

L N	USE CODE	CLS	LAND USE DESCRIPTION	CAP	R D	LOC ZONE	FRONT	DEPTH	TOT LND UTS	UNIT TYPE	D T	DPTH FACT	% COND	TOT ADJ	UNIT PRICE	ADJ UNIT PRICE	LAND VALUE	OTHER ADJUSTMENTS AND NOTES	YEAR	DENSITY	DECL	FRZ	YR	CONSRV
1	000100	C	SFR	0		RSF-1	0.00	0.00	1.00	LT		1.00	1.00	1.00	150,000.00	150,000.00	150,000							

REVIEW DATE 05/12/2019 BY KBA Total Acres: 0.00 Total Land Value: 150,000 Market: 0 Agricultural: 0 Common: 150,000 PRINTED 08/06/2024 BY SYS