LOT 24
IN OR 1344/1312
PINEY ISLAND II PB 4/97

WOLPERT RICHARD & JANET
94065 LIMPKIN LN
FERNANDINA BEACH, FL 32034

2024

37-2N-28-5000-0024-0000

NASSAU COUNTY PROPERTY

BUILDING CHARACTERISTICS

ELEMENT	CD	CONSTRUCTION
Exterior Wall	10	ABOVE AVG 50
Exterior Wall	17	CB STUCCO 50
Roof Structur	03	GABLE/HIP 100
Roof Cover	12	MODULAR MT 100
Interior Wall	05	DRYWALL 100
Interior Floo	12	HARDWOOD 90
Interior Floo	11	CLAY TILE 10
Air Condition	03	CENTRAL 100
Heating Type	04	AIR DUCTED 100
Bedrooms		3 100
Bathrooms		2 100
Frame	03	MASONRY 100
Stories	2.	2. 100
Units		0 100
Occupancy	00	NONE 100
Quality	03	Quality Level 03
DOR CODE	0100	SINGLE FAMILY
MAP NUM		MKT AREA 04
NEIGHBORHOOD/LOC	4016.00	

AREA TYPE	TOTAL GROSS AREA	PCT OF BASE	TOT ADJ AREA	SUBAREA MARKET VALUE
BAS	1,807	100	1,807	274,330
FGR	953	55	524	79,552
FOP	534	30	160	24,291
FOP	539	30	162	24,594
FST	854	55	470	71,353
STR	88	10	9	1,367
UOP	510	20	102	15,485
UOP	539	20	108	16,396
TOTALS	5,824		3,342	507,366

MARKET ADJUSTMENTS

TYPE	MDL	EFF. AREA	TOT ADJ PTS	EFF. BASE RATE	REPL. COST NEW	AYB	EYB	ECON	FNCT		NORM	% COND
0500	01	3,342	105.1560	157.73	527,134	2015	2015	0	0	0	3.75	96.25

1 SFR CUST – 100% - 2016 Heated Area: 1807 HX Base Yr 2016

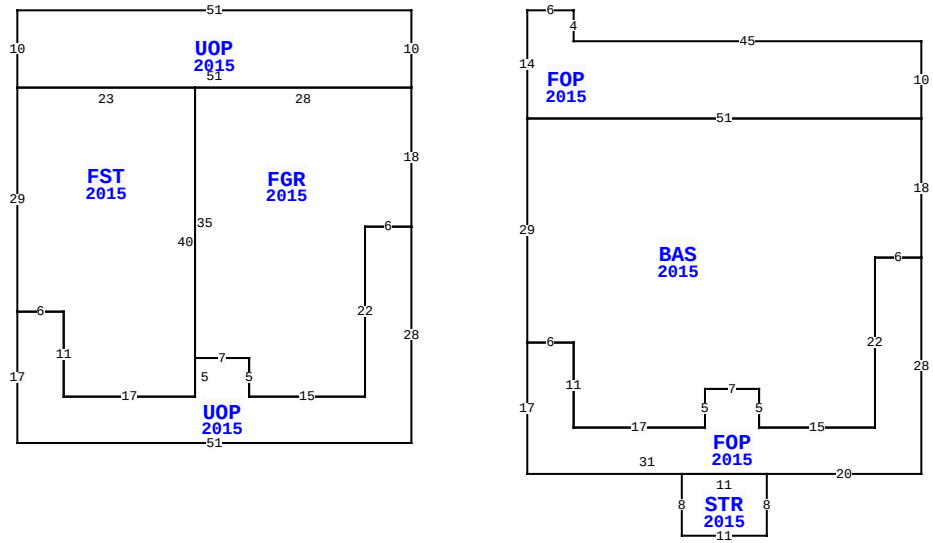

94065 LIMPKIN LN, FERNANDINA BEACH

BLD DATE		LGL DATE	
XF DATE		LAND DATE	03/22/2024 MLU
INC DATE		AG DATE	

VALUATION SUMMARY

VALUATION BY		STANDARD
Tax Group: 7	Tax Dist:	
BUILDING MARKET VALUE		507,366
TOTAL MARKET OB/XF VALUE		0
TOTAL LAND VALUE - MARKET		150,000
TOTAL MARKET VALUE		657,366
SOH/AGL Deduction		369,570
ASSESSED VALUE		287,796
TOTAL EXEMPTION VALUE	HX HB	50,000
BASE TAXABLE VALUE		237,796
TOTAL JUST VALUE		657,366
NCON VALUE		0
INCOME VALUE		
PREVIOUS YEAR MKT VALUE		548,961

PERMIT NUM	DESCRIPTION	AMT	ISSUED
B1429431	CO ISSUED	0	12/17/2015
B1429431	NEW CONSTR	298,466	10/01/2014

SALES DATA

OFF RECORD Number	DATE	TYPE INST	Q U	V I	RSN CD	SALE PRICE
1344/1312	8/24/2005	WD	Q	V		195,000
GRANTOR: HURST WILLIAM P & DIA						
GRANTEE: WOLPERT RICHARD & J						
1116/1855	2/27/2003	WD	U	V		80,000
GRANTOR: THOMPSON KEITH & JANE						
GRANTEE: HURST WILLIAM P & D						

BUILDING NOTES

BUILDING DIMENSIONS

UOP=[YR=2015] W51 S10 FST=[YR=2015] S29 UOP=[YR=2015] S17 E51 N28 FGR=[YR=2015] N18 W28 S35 E7 S5 E15 N22 E6$ W6 S22 W15 N5 W7 S5 W17 N11 W6 $ E6 S11 E17 N40 W23$ E51 N10$ PTR=E15 FOP=[YR=2015] E6 S4 E45 S10 BAS=[YR=2015] S18 FOP=[YR=2015] S28 W20 STR=[YR=2015] S8 W11 N8 E11$ W31 N17 E6 S11 E17 N5 E7 S5 E15 N22 E6 $ W6 S22 W15 N5 W7 S5 W17 N11 W6 N29 E51$ W51 N14$ W15 $.

EXTRA FEATURES

LN	OB/XF CODE	DESCRIPTION	BLD	CAP	L	W	UNITS	UT	Adj R	ADJ UNIT PRICE	ORIG COND	YEAR ON	YEAR ACTUAL	Q	% COND	OB/XF MKT VALUE	NOTES

LAND DESCRIPTION

TOTAL OB/XF 0

LN	USE CODE	CLS	LAND USE DESCRIPTION	CAP	RD	LOC ZONE	FRONT	DEPTH	TOT LND UTS	UNIT TYPE	DT	DPTH FACT	% COND	TOT ADJ	UNIT PRICE	ADJ UNIT PRICE	LAND VALUE	OTHER ADJUSTMENTS AND NOTES	YEAR	DENSITY	DECL	FRZ	YR	CONSRV
1	000100	C	SFR	100		RSF-1	0.00	0.00	1.00	LT		1.00	1.00	1.00	150,000.00	150,000.00	150,000							

REVIEW DATE 07/13/2020 BY KWA Total Acres: 0.00 Total Land Value: 150,000 Market: 0 Agricultural: 0 Common: 150,000 PRINTED 08/06/2024 BY SYS