LOT 45
IN OR 892/1447
THE VILLAGES OF MARSH LAKES #2

GIVENS JOHN J & DONNA C
95206 VILLAGE DRIVE
FERNANDINA BEACH, FL 32034

2024

37-2N-28-227W-0045-0000

NASSAU COUNTY PROPERTY

BUILDING CHARACTERISTICS

ELEMENT	CD	CONSTRUCTION
Exterior Wall	16	WD FR STUC 100
Roof Structur	03	GABLE/HIP 100
Roof Cover	03	COMP SHNGL 100
Interior Wall	05	DRYWALL 100
Interior Floo	14	CARPET 80
Interior Floo	11	CLAY TILE 20
Air Condition	03	CENTRAL 100
Heating Type	04	AIR DUCTED 100
Bedrooms		3 100
Bathrooms		2.5 100
Frame	02	WOOD FRAME 100
Stories	2.	2. 100
Units		0 100
Occupancy	00	NONE 100
Quality	04	Quality Level 04
DOR CODE	0100	SINGLE FAMILY
MAP NUM		MKT AREA 04
NEIGHBORHOOD/LOC	4015.00	

AREA TYPE	TOTAL GROSS AREA	PCT OF BASE	TOT ADJ AREA	SUBAREA MARKET VALUE
BAS	1,553	100	1,553	191,537
FGR	526	55	289	35,643
FOP	37	30	11	1,357
FOP	104	30	31	3,823
FSP	132	40	53	6,537
FUS	900	100	900	111,000
PTO	170	5	8	987
TOTALS	3,422		2,845	350,884

MARKET ADJUSTMENTS

TYPE	MDL	EFF. AREA	TOT ADJ PTS	EFF. BASE RATE	REPL. COST NEW	AYB	EYB	ECON	FNCT		NORM	% COND
0900	01	2,845	111.4848	139.36	396,479	2000	2000	0	0	0	11.50	88.50

1 SNGL FAM – 100% - 2001 Heated Area: 2453 HX Base Yr 2001

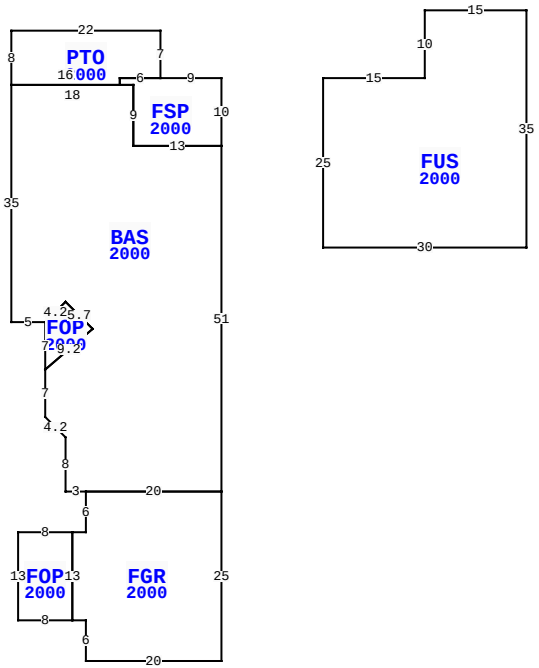

95206 VILLAGE DR, FERNANDINA BEACH

BLD DATE		LGL DATE	
XF DATE		LAND DATE	03/19/2024 MLU
INC DATE		AG DATE	

VALUATION SUMMARY

VALUATION BY		STANDARD
Tax Group: 7	Tax Dist:	
BUILDING MARKET VALUE		350,884
TOTAL MARKET OB/XF VALUE		6,166
TOTAL LAND VALUE - MARKET		200,000
TOTAL MARKET VALUE		557,050
SOH/AGL Deduction		293,768
ASSESSED VALUE		263,282
TOTAL EXEMPTION VALUE	HX HB	50,000
BASE TAXABLE VALUE		213,282
TOTAL JUST VALUE		557,050
NCON VALUE		0
INCOME VALUE		
PREVIOUS YEAR MKT VALUE		481,600

PERMIT NUM	DESCRIPTION	AMT	ISSUED
996351	NEW CONSTR	99,000	08/01/1999

SALES DATA

OFF RECORD Number	DATE	TYPE INST	Q U	V I	RSN CD	SALE PRICE
0892/1447	7/26/1999	WD	Q	V		51,000
GRANTOR: BRYLEN HOMES LTD						
GRANTEE: GIVENS JOHN J & DON						
0836/0191	6/03/1998	WD	U	V	19	25,000
GRANTOR: K T FERNANDINA JOINT						
GRANTEE: BRYLEN HOMES LTD						

BUILDING NOTES

BUILDING DIMENSIONS

FSP=[YR=2000] W9 PTO=[YR=2000] N7 W22 S8 BAS=[YR=2000] S35 E5 FOP=[YR=2000] S7 R7 U6 U4 L4 L3 D3 $ U3 R3 R4 D4 D6 L7 S7 R3 D3 S8 E3 FGR=[YR=2000] S6 W2 FOP=[YR=2000] W8 S13 E8 N13$ S13 E2 S6 E20 N25 W20$ E20 N51 W13 N9 W18$ E16 N1 E6$ W6 S1 E2 S9 E13 N10$ PTR= E15 FUS=[YR=2000] E15 N10 E15 S35 W30 N25 $ W15 $.

EXTRA FEATURES

LN	OB/XF CODE	DESCRIPTION	BLD	CAP	L	W	UNITS	UT	Adj R	ADJ UNIT PRICE	ORIG COND	YEAR ON	YEAR ACTUAL	Q	% COND	OB/XF MKT VALUE	NOTES
1	0810	CONCRETE A	0	100	0	0	252.00	SF	6.50	6.50	100	2000	2000	3	79	1,294	
2	1242	WD DECK A	0	100	8	4	32.00	SF	10.00	10.00	100	2000	2000	3	20	64	
3	0300	BOAT DCK W	0	100	0	0	125.00	SF	40.00	40.00	100	2005	2005	3	40	2,000	
4	0920	CWALL-WD/M	0	100	0	0	36.00	LF	390.00	390.00	100	2000	2000	3	20	2,808	

LAND DESCRIPTION

TOTAL OB/XF 6,166

LN	USE CODE	CLS	LAND USE DESCRIPTION	CAP	RD	LOC ZONE	FRONT	DEPTH	TOT LND UTS	UNIT TYPE	DT	DPTH FACT	% COND	TOT ADJ	UNIT PRICE	ADJ UNIT PRICE	LAND VALUE	OTHER ADJUSTMENTS AND NOTES	YEAR	DENSITY	DECL	FRZ	YR	CONSRV
1	000133	C	SFR LAKE	100		PUD	0.00	0.00	1.00	LT		1.00	1.00	1.00	200,000.00	200,000.00	200,000							

REVIEW DATE 01/10/2020 BY TWA Total Acres: 0.00 Total Land Value: 200,000 Market: 0 Agricultural: 0 Common: 200,000 PRINTED 08/06/2024 BY SYS