LOT 116
MARSH LAKES PB 5/159-167

MACLAUGHLIN LESLEY H L/E/
99050 GREEN HERON WAY
FERNANDINA BEACH, FL 32034

2024

37-2N-28-1320-0116-0000

BUILDING CHARACTERISTICS

ELEMENT	CD	CONSTRUCTION
Exterior Wall	16	WD FR STUC 100
Roof Structur	03	GABLE/HIP 100
Roof Cover	03	COMP SHNGL 100
Interior Wall	05	DRYWALL 100
Interior Floo	12	HARDWOOD 90
Interior Floo	14	CARPET 10
Air Condition	03	CENTRAL 100
Heating Type	04	AIR DUCTED 100
Bedrooms		4 100
Bathrooms		3 100
Frame	02	WOOD FRAME 100
Stories	2.	2. 100
Units		0 100
Occupancy	00	NONE 100
Quality	03	Quality Level 03
DOR CODE	0100	SINGLE FAMILY
MAP NUM		MKT AREA 04
NEIGHBORHOOD/LOC	4015.00	

AREA TYPE	TOTAL GROSS AREA	PCT OF BASE	TOT ADJ AREA	SUBAREA MARKET VALUE
BAS	2,547	100	2,547	322,034
FGR	440	55	242	30,598
FOP	52	30	16	2,023
FOP	340	30	102	12,897
FUS	638	100	638	80,667
STR	90	10	9	1,138
TOTALS	4,107		3,554	449,356

MARKET ADJUSTMENTS

TYPE	MDL	EFF. AREA	TOT ADJ PTS	EFF. BASE RATE	REPL. COST NEW	AYB	EYB	ECON	FNCT		NORM	% COND
0500	01	3,554	100.3500	150.52	534,948	1991	1991	0	0	0	16.00	84.00

1 SFR CUST – 100% - 2008 Heated Area: 3185 HX Base Yr 2008

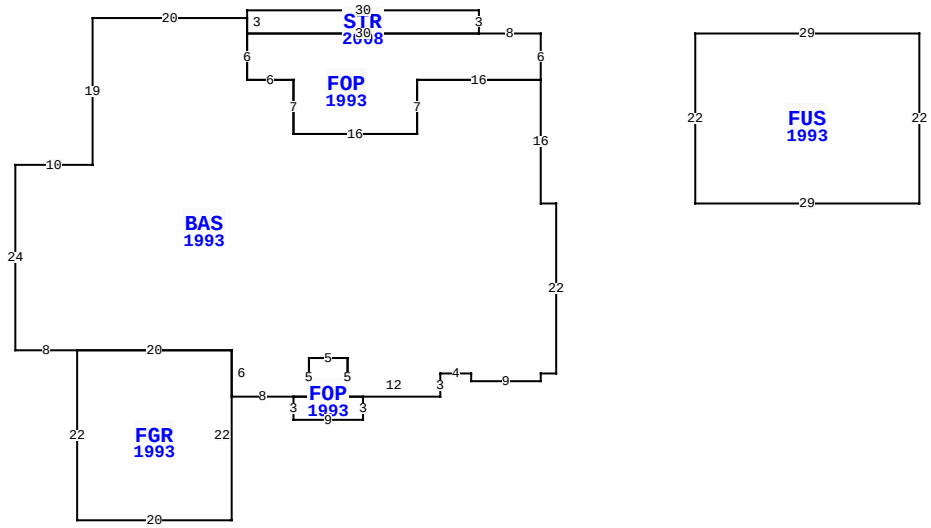

99050 GREEN HERON WAY, FERNANDINA BEACH

BLD DATE		LGL DATE	
XF DATE		LAND DATE	03/19/2024 MLU
INC DATE		AG DATE	

NASSAU COUNTY PROPERTY

PAGE 1 of 1 7

VALUATION SUMMARY

VALUATION BY		STANDARD
Tax Group: 7	Tax Dist:	
BUILDING MARKET VALUE		449,356
TOTAL MARKET OB/XF VALUE		38,816
TOTAL LAND VALUE - MARKET		225,000
TOTAL MARKET VALUE		713,172
SOH/AGL Deduction		452,849
ASSESSED VALUE		260,323
TOTAL EXEMPTION VALUE	HX HB WX	55,000
BASE TAXABLE VALUE		205,323
TOTAL JUST VALUE		713,172
NCON VALUE		0
INCOME VALUE		
PREVIOUS YEAR MKT VALUE		562,959

PERMIT NUM	DESCRIPTION	AMT	ISSUED
B018009	SWIM POOL	20,000	02/01/2001

SALES DATA

OFF RECORD Number	DATE	TYPE INST	Q U	V I	RSN CD	SALE PRICE
2414/0401	12/03/2020	LE	U	I	11	100
GRANTOR: MACLAUGHLIN LESLEY H						
GRANTEE: HARRIS MARTHA M & M						
1530/0729	10/15/2007	WD	Q	I		615,000
GRANTOR: PAGE DAVID P JR & KIM						
GRANTEE: MACLAUGHLIN JAMES W						

BUILDING NOTES

BUILDING DIMENSIONS

FOP=[YR=1993] W8 STR=[YR=2008] N3 W30 S3 E30$ W30 BAS=[YR=1993] N2 W20 S19W10 S24 E8 FGR=[YR=1993] S22 E20 N22W20$ E20 S6 E8 FOP=[YR=1993] S3 E9 N3 W2 N5 W5 S5 W2$ E2 N5 E5 S5E12 N3 E4 S1 E9 N1 E2 N22 W2 N16 W16 S7 W16 N7 W6 N6$ S6 E6S7 E16 N7 E16 N6$ PTR= E20 FUS=[YR=1993] E29 S22 W29 N22$ W20$.

EXTRA FEATURES

LN	OB/XF CODE	DESCRIPTION	BLD	CAP	L	W	UNITS	UT	Adj R	ADJ UNIT PRICE	ORIG COND	YEAR ON	YEAR ACTUAL	Q	% COND	OB/XF MKT VALUE	NOTES
1	0500	FP-PRE FAB	0	100	0	0	1.00	UT	3,500.00	3,500.00	100	1991	1991	3	70	2,450	
2	0812	CONCRETE C	0	100	0	0	2,943.00	SF	4.00	4.00	100	1991	1991	3	62	7,299	
3	0861	POOL GUNIT	0	100	0	0	540.00	SF	85.00	85.00	100	2001	2001	3	27	12,393	
4	0845	KOOL DECK	0	100	0	0	1,470.00	SF	7.25	7.25	100	2001	2001	3	80	8,526	
5	0845	KOOL DECK	0	100	0	0	152.00	SF	7.25	7.25	100	2001	2001	3	80	882	
6	0350	CARPORT WD	0	100	8	10	80.00	SF	13.00	13.00	100	2001	2001	3	20	208	
7	1076	TRELLIS A	0	100	19	9	171.00	SF	7.50	7.50	100	2001	2001	3	27	346	
8	0300	BOAT DCK W	0	100	0	0	174.00	SF	40.00	40.00	100	2001	2001	3	29	2,018	
9	0462	ST/AL FNC	0	100	0	0	760.00	SF	10.00	10.00	100	2006	2006	3	44	3,344	
10	0600	SUMMER KIT	0	100	0	0	1.00	UT	5,000.00	5,000.00	100	2006	2006	3	27	1,350	

TOTAL OB/XF 38,816

LAND DESCRIPTION

LN	USE CODE	CLS	LAND USE DESCRIPTION	CAP	RD	LOC ZONE	FRONT	DEPTH	TOT LND UTS	UNIT TYPE	DT	DPTH FACT	% COND	TOT ADJ	UNIT PRICE	ADJ UNIT PRICE	LAND VALUE	OTHER ADJUSTMENTS AND NOTES	YEAR	DENSITY	DECL	FRZ	YR	CONSRV
1	000133	C	SFR LAKE	100		PUD	0.00	0.00	1.00	LT		1.00	1.00	1.00	225,000.00	225,000.00	225,000							

REVIEW DATE 11/26/2019 BY NWA Total Acres: 0.00 Total Land Value: 225,000 Market: 0 Agricultural: 0 Common: 225,000 PRINTED 08/06/2024 BY SYS