LOT 86
MARSH LAKES PB 5/159-167

HALL PAMELA W
96147 MARSH LAKES DR
FERNANDINA BEACH, FL 32034

2024

37-2N-28-1320-0086-0000

NASSAU COUNTY PROPERTY

BUILDING CHARACTERISTICS

ELEMENT	CD	CONSTRUCTION
Exterior Wall	16	WD FR STUC 100
Roof Structur	03	GABLE/HIP 100
Roof Cover	03	COMP SHNGL 100
Interior Wall	05	DRYWALL 100
Interior Floo	12	HARDWOOD 80
Interior Floo	15	HARDTILE 20
Air Condition	03	CENTRAL 100
Heating Type	04	AIR DUCTED 100
Bedrooms		3 100
Bathrooms		2 100
Frame	02	WOOD FRAME 100
Stories	1.	1. 100
Units		0 100
Occupancy	00	NONE 100
Quality	03	Quality Level 03
DOR CODE	0100	SINGLE FAMILY
MAP NUM		MKT AREA 04
NEIGHBORHOOD/LOC	4015.00	

AREA TYPE	TOTAL GROSS AREA	PCT OF BASE	TOT ADJ AREA	SUBAREA MARKET VALUE
BAS	1,704	100	1,704	263,501
FGR	576	55	317	49,020
FOP	24	30	7	1,083
FSP	182	40	73	11,289
STP	48	10	5	774
UOP	304	20	61	9,433
TOTALS	2,838		2,167	335,097

MARKET ADJUSTMENTS

TYPE	MDL	EFF. AREA	TOT ADJ PTS	EFF. BASE RATE	REPL. COST NEW	AYB	EYB	ECON	FNCT		NORM	% COND
0500	01	2,167	113.2880	169.93	368,238	1989	2005	0	0	0	9.00	91.00

1 SFR CUST – 100% - 2023 Heated Area: 1704 HX Base Yr 2023

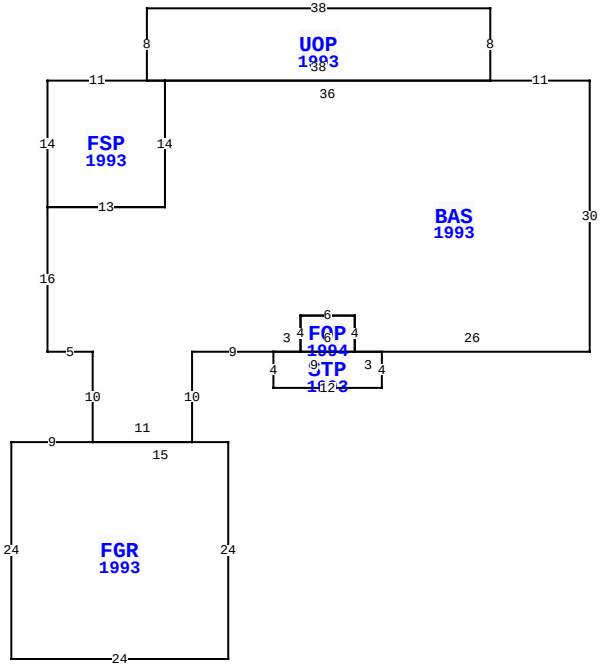

96147 MARSH LAKES DR, FERNANDINA BEACH

BLD DATE		LGL DATE	
XF DATE		LAND DATE	03/19/2024 MLU
INC DATE		AG DATE	

VALUATION SUMMARY

VALUATION BY		STANDARD
Tax Group: 7	Tax Dist:	
BUILDING MARKET VALUE		335,097
TOTAL MARKET OB/XF VALUE		10,274
TOTAL LAND VALUE - MARKET		225,000
TOTAL MARKET VALUE		570,371
SOH/AGL Deduction		105,985
ASSESSED VALUE		464,386
TOTAL EXEMPTION VALUE	HX HB	50,000
BASE TAXABLE VALUE		414,386
TOTAL JUST VALUE		570,371
NCON VALUE		0
INCOME VALUE		
PREVIOUS YEAR MKT VALUE		450,860

PERMIT NUM	DESCRIPTION	AMT	ISSUED
B2104693	(1) DOOR	2,826	04/15/2021
P172162	OTHER	0	04/01/2017
5894	NEW CONSTR	67,213	07/26/1989

SALES DATA

OFF RECORD Number	DATE	TYPE INST	Q U	V I	RSN CD	SALE PRICE
2426/1619	1/20/2021	WD	Q	I	01	485,000
GRANTOR: TRINE THOMAS N & CARO						
GRANTEE: HALL PAMELA W						
2140/1055	8/16/2017	WD	Q	I	01	340,000
GRANTOR: SPEER THERESA C & ROB						
GRANTEE: TRINE THOMAS N & CA						

BUILDING NOTES

BUILDING DIMENSIONS

BAS=[YR=1993] W11 UOP=[YR=1993] N8 W38 S8 FSP=[YR=1993] W11 S14 E13 N14 W2 $ E38$ W36 S14 W13 S16 E5 S10 FGR=[YR=1993] W9 S24 E24 N24 W15 $ E11 N10 E9 STP=[YR=1993] S4 E12 N4 W3 FOP=[YR=1994] N4 W6 S4 E6$ W9 $ E3 N4 E6 S4 E26 N30 $.

EXTRA FEATURES

LN	OB/XF CODE	DESCRIPTION	BLD	CAP	L	W	UNITS	UT	Adj R	ADJ UNIT PRICE	ORIG COND	YEAR ON	YEAR ACTUAL	Q	% COND	OB/XF MKT VALUE	NOTES
1	0811	CONCRETE B	0	100	0	0	2,245.00	SF	5.20	5.20	100	1989	1989	3	57	6,654	
2	0504	FP-ELECTRI	0	100	0	0	1.00	UT	2,000.00	2,000.00	100	1989	1989	3	66	1,320	
3	0300	BOAT DCK W	0	100	0	0	168.00	SF	40.00	40.00	100	2002	2002	3	30	2,016	
4	0911	SCRN RM A	0	100	6	10	60.00	SF	17.50	17.50	100	2006	2006	3	27	284	

LAND DESCRIPTION

TOTAL OB/XF 10,274

LN	USE CODE	CLS	LAND USE DESCRIPTION	CAP	RD	LOC ZONE	FRONT	DEPTH	TOT LND UTS	UNIT TYPE	DT	DPTH FACT	% COND	TOT ADJ	UNIT PRICE	ADJ UNIT PRICE	LAND VALUE	OTHER ADJUSTMENTS AND NOTES	YEAR	DENSITY	DECL	FRZ	YR	CONSRV
1	000133	C	SFR LAKE	100		PUD	0.00	0.00	1.00	LT		1.00	1.00	1.00	225,000.00	225,000.00	225,000							

REVIEW DATE 05/12/2019 BY KBA Total Acres: 0.00 Total Land Value: 225,000 Market: 0 Agricultural: 0 Common: 225,000 PRINTED 08/06/2024 BY SYS