LOT 77
IN OR 1919/1652
MARSH LAKES PB 5/159-167

PFLEIGER MARY
97117 WOODSTORK LN
FERNANDINA BEACH, FL 32034

2024

37-2N-28-1320-0077-0000

BUILDING CHARACTERISTICS

ELEMENT	CD	CONSTRUCTION
Exterior Wall	16	WD FR STUC 100
Roof Structur	03	GABLE/HIP 100
Roof Cover	03	COMP SHNGL 100
Interior Wall	05	DRYWALL 100
Interior Floo	13	LVT/LAMNT 70
Interior Floo	15	HARDTILE 30
Air Condition	03	CENTRAL 100
Heating Type	04	AIR DUCTED 100
Bedrooms		4 100
Bathrooms		3.5 100
Frame	02	WOOD FRAME 100
Stories	1.	1. 100
Units		0 100
Occupancy	00	NONE 100
Quality	03	Quality Level 03
DOR CODE	0100	SINGLE FAMILY
MAP NUM		MKT AREA 04
NEIGHBORHOOD/LOC	4015.00	

AREA TYPE	TOTAL GROSS AREA	PCT OF BASE	TOT ADJ AREA	SUBAREA MARKET VALUE
BAS	2,933	100	2,933	375,626
FEP	292	80	234	29,968
FGR	560	55	308	39,445
FOP	32	30	10	1,281
USP	182	30	55	7,044
TOTALS	3,999		3,540	453,364

MARKET ADJUSTMENTS

TYPE	MDL	EFF. AREA	TOT ADJ PTS	EFF. BASE RATE	REPL. COST NEW	AYB	EYB	ECON	FNCT		NORM	% COND
0500	01	3,540	102.8700	154.30	546,222	1989	1989	0	0	0	17.00	83.00

1 SFR CUST – 100% - 2015 Heated Area: 2933 HX Base Yr 2015

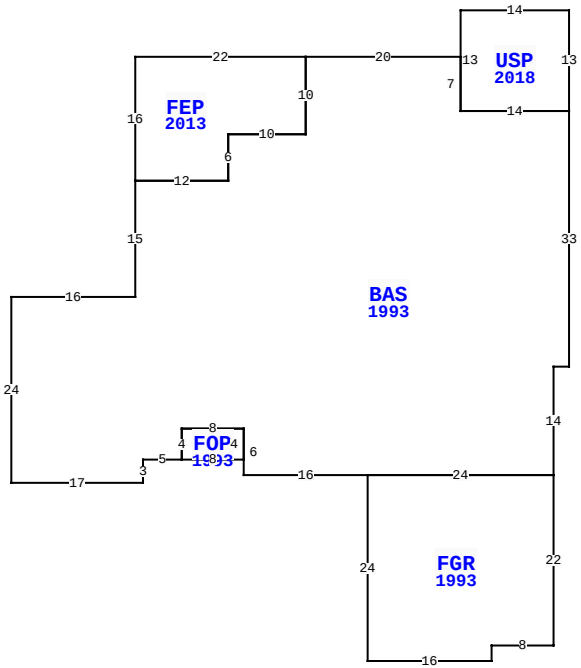

97117 WOODSTORK LN, FERNANDINA BEACH

BLD DATE		LGL DATE	
XF DATE		LAND DATE	03/19/2024 MLU
INC DATE		AG DATE	

NASSAU COUNTY PROPERTY

PAGE 1 of 1 7

VALUATION SUMMARY

VALUATION BY		STANDARD
Tax Group: 7	Tax Dist:	
BUILDING MARKET VALUE		453,364
TOTAL MARKET OB/XF VALUE		17,366
TOTAL LAND VALUE - MARKET		225,000
TOTAL MARKET VALUE		695,730
SOH/AGL Deduction		267,665
ASSESSED VALUE		428,065
TOTAL EXEMPTION VALUE	HX HB WX	55,000
BASE TAXABLE VALUE		373,065
TOTAL JUST VALUE		695,730
NCON VALUE		0
INCOME VALUE		
PREVIOUS YEAR MKT VALUE		542,619

PERMIT NUM	DESCRIPTION	AMT	ISSUED
B1800726	SCRN ENCLSRE	4,178	02/01/2018
B007498	REMODEL	15,000	10/01/2000
3631	NEW CONSTR	6,500	08/25/1989
6159	NEW CONSTR	4,500	08/25/1989
5914	NEW CONSTR	110,000	08/08/1989

SALES DATA

OFF RECORD Number	DATE	TYPE INST	Q U	V I	RSN CD	SALE PRICE
1919/1652	5/16/2014	WD	Q	I	02	449,000
GRANTOR: WEINTRAUB ROBERT M TR						
GRANTEE: PFLEIGER ROBERT & M						
1335/0598	7/22/2005	QC	U	I	07	100
GRANTOR: WEINTRAUB ROBERT M						
GRANTEE: WEINTRAUB ROBERT M						

BUILDING NOTES

BUILDING DIMENSIONS

USP=[YR=2018] N13 W14 S13 E14$ BAS=[YR=1993] W14 N7 W20
FEP=[YR=2013] W22 S16 E12N6 E10 N10$ S10 W10 S6 W12 S15 W16
S24 E17 N3 E5 FOP=[YR=1993] E8 N4W8 S4$ N4 E8 S6 E16
FGR=[YR=1993] S24 E16N2 E8 N22 W24$ E24 N14 E2 N33$.

EXTRA FEATURES

LN	OB/XF CODE	DESCRIPTION	BLD	CAP	L	W	UNITS	UT	Adj R	ADJ UNIT PRICE	ORIG COND	YEAR ON	YEAR ACTUAL	Q	% COND	OB/XF MKT VALUE	NOTES
1	0850	PEBBLE WLK	0	100	0	0	220.00	SF	3.50	3.50	100	1989	1989	3	57	439	
2	0500	FP-PRE FAB	0	100	0	0	1.00	UT	3,500.00	3,500.00	100	1989	1989	3	66	2,310	
3	0850	PEBBLE WLK	0	100	0	0	220.00	SF	3.50	3.50	100	1989	1989	3	57	439	
4	0855	CONC PAVER	0	100	0	0	2,470.00	SF	7.00	7.00	100	2002	2002	3	82	14,178	

LAND DESCRIPTION

TOTAL OB/XF 17,366

LN	USE CODE	CLS	LAND USE DESCRIPTION	CAP	RD	LOC ZONE	FRONT	DEPTH	TOT LND UTS	UNIT TYPE	DT	DPTH FACT	% COND	TOT ADJ	UNIT PRICE	ADJ UNIT PRICE	LAND VALUE	OTHER ADJUSTMENTS AND NOTES	YEAR	DENSITY	DECL	FRZ	YR	CONSRV
1	000133	C	SFR LAKE	100		PUD	0.00	0.00	1.00	LT		1.00	1.00	1.00	225,000.00	225,000.00	225,000							

REVIEW DATE 11/26/2019 BY NW Total Acres: 0.00 Total Land Value: 225,000 Market: 0 Agricultural: 0 Common: 225,000 PRINTED 08/06/2024 BY SYS