LOT 76
IN OR 1870/639
MARSH LAKES PB 5/159-167

BRENNER RICHARD/PERKINS JOANN
97133 WOODSTORK LN
FERNANDINA BEACH, FL 32034

2024

37-2N-28-1320-0076-0000

BUILDING CHARACTERISTICS

ELEMENT	CD	CONSTRUCTION
Exterior Wall	17	CB STUCCO 50
Exterior Wall	31	HARDIE BRD 50
Roof Structur	03	GABLE/HIP 100
Roof Cover	03	COMP SHNGL 100
Interior Wall	05	DRYWALL 100
Interior Floo	12	HARDWOOD 60
Interior Floo	11	CLAY TILE 40
Air Condition	03	CENTRAL 100
Heating Type	04	AIR DUCTED 100
Bedrooms		3 100
Bathrooms		2.5 100
Frame	04	REIN CONC 100
Stories	2.	2. 100
Units		0 100
Occupancy	00	NONE 100
Quality	03	Quality Level 03
DOR CODE	0100	SINGLE FAMILY
MAP NUM		MKT AREA 04
NEIGHBORHOOD/LOC	4015.00	

AREA TYPE	TOTAL GROSS AREA	PCT OF BASE	TOT ADJ AREA	SUBAREA MARKET VALUE
FGR	1,248	55	686	99,446
FOP	144	30	43	6,233
FOP	144	30	43	6,233
FOP	384	30	115	16,671
FOP	531	30	159	23,050
FST	36	55	20	2,899
FST	36	55	20	2,899
FST	1,211	55	666	96,547
FUS	2,454	100	2,454	355,746
SFB	230	80	184	26,674
TOTALS	6,682		4,417	640,313

MARKET ADJUSTMENTS

TYPE	MDL	EFF. AREA	TOT ADJ PTS	EFF. BASE RATE	REPL. COST NEW	AYB	EYB	ECON	FNCT		NORM	% COND
0500	01	4,417	100.9360	151.40	668,734	2014	2014	0	0	0	4.25	95.75

1 SFR CUST – 100% - 2015 Heated Area: 2638 HX Base Yr 2015

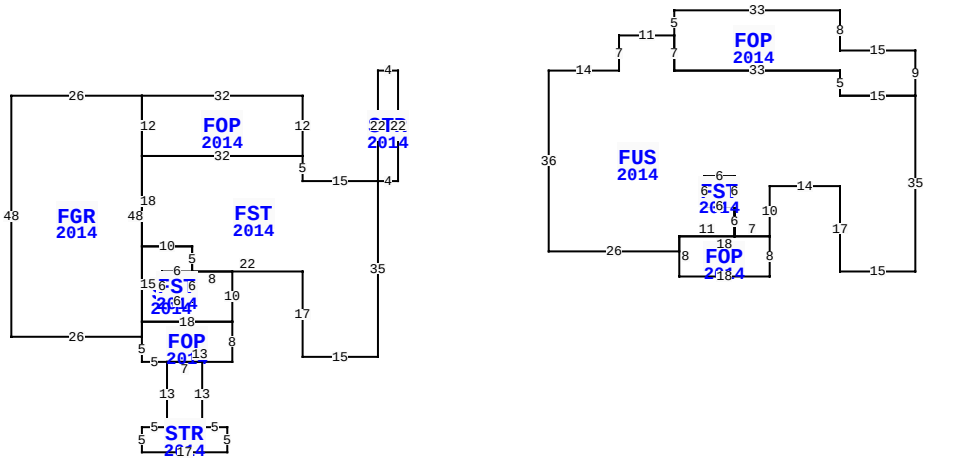

** This building has 12 Sub-Areas

97133 WOODSTORK LN, FERNANDINA BEACH

BLD DATE		LGL DATE	
XF DATE		LAND DATE	03/19/2024 MLU
INC DATE		AG DATE	

NASSAU COUNTY PROPERTY

PAGE 1 of 1 7

VALUATION SUMMARY

VALUATION BY		STANDARD
Tax Group: 7	Tax Dist:	
BUILDING MARKET VALUE		640,313
TOTAL MARKET OB/XF VALUE		38,033
TOTAL LAND VALUE - MARKET		225,000
TOTAL MARKET VALUE		903,346
SOH/AGL Deduction		376,928
ASSESSED VALUE		526,418
TOTAL EXEMPTION VALUE	HX HB	50,000
BASE TAXABLE VALUE		476,418
TOTAL JUST VALUE		903,346
NCON VALUE		0
INCOME VALUE		
PREVIOUS YEAR MKT VALUE		849,774

PERMIT NUM	DESCRIPTION	AMT	ISSUED
B1327761	CO ISSUED	0	08/22/2014
B1327761	NEW CONSTR	395,246	09/01/2013

SALES DATA

OFF RECORD Number	DATE	TYPE INST	Q / U	V / I	RSN CD	SALE PRICE
1870/0639	7/15/2013	WD	Q	V	02	157,500
GRANTOR: BOGERT BRUCE & MARINE						
GRANTEE: BRENNER RICHARD & J						
1170/0803	9/11/2003	WD	Q	V		157,500
GRANTOR: SIU MARY TANG CASSILD						
GRANTEE: BOGERT BRUCE & MARI						

BUILDING NOTES

BUILDING DIMENSIONS

STR=[YR=2014] W4 S22 FST=[YR=2014] W15 N5 FOP=[YR=2014] N12 W32 FGR=[YR=2014] W26 S48 E26 FOP=[YR=2014] S5 E5 STR=[YR=2014] S13 W5 S5 E17 N5 W5 N13 W7 $ E13 N8 SFB=[YR=2014] N10 W8 FST=[YR=2014] S6 W6 N6 E6 $ N5 W10 S15E18 $W18S3$ N48 $ S12 E32 $ W32 S18 E10 S5 E22 S17 E15 N35 $ E4 N22$ PTR= E30 FUS=[YR=2014] E14 N7 E11 FOP=[YR=2014] N5 E33 S8 E15 S9 W15 N5 W33 N7 $ S7 E33 S5 E15 S35 W15 N17 W14 S10 FOP=[YR=2014] S8 W18 N8 E18 $ W7 N6 FST=[YR=2014] N6W6 S6 E6 $ S6 W11 S3 W26 N36 $ W30 $.

EXTRA FEATURES

LN	OB/XF CODE	DESCRIPTION	BLD	CAP	L	W	UNITS	UT	Adj R	ADJ UNIT PRICE	ORIG COND	YEAR ON	YEAR ACTUAL	Q	% COND	OB/XF MKT VALUE	NOTES
1	0409	ELEVATOR R	0	100	0	0	1.00	UT	10,200.00	10,200.00	100	2014	2014	3	100	10,200	
2	0855	CONC PAVER	0	100	0	0	3,094.00	SF	7.00	7.00	100	2014	2014	3	95	20,575	
3	0300	BOAT DCK W	0	100	0	0	224.00	SF	40.00	40.00	100	2016	2016	3	81	7,258	

LAND DESCRIPTION

TOTAL OB/XF 38,033

LN	USE CODE	CLS	LAND USE DESCRIPTION	CAP	RD	LOC ZONE	FRONT	DEPTH	TOT LND UTS	UNIT TYPE	DT	DPTH FACT	% COND	TOT ADJ	UNIT PRICE	ADJ UNIT PRICE	LAND VALUE	OTHER ADJUSTMENTS AND NOTES	YEAR	DENSITY	DECL	FRZ	YR	CONSRV
1	000133	C	SFR LAKE	100		PUD	0.00	0.00	1.00	LT		1.00	1.00	1.00	225,000.00	225,000.00	225,000							

REVIEW DATE 08/20/2020 BY KWA Total Acres: 0.00 Total Land Value: 225,000 Market: 0 Agricultural: 0 Common: 225,000 PRINTED 08/06/2024 BY SYS