LOT 71
MARSH LAKES PB 5/159-167

LESSMAN BONNIE
97144 WOODSTORK LANE
FERNANDINA BEACH, FL 32034-6869

2024

37-2N-28-1320-0071-0000

NASSAU COUNTY PROPERTY

BUILDING CHARACTERISTICS

ELEMENT	CD	CONSTRUCTION
Exterior Wall	16	WD FR STUC 100
Roof Structur	08	IRREGULAR 100
Roof Cover	03	COMP SHNGL 100
Interior Wall	05	DRYWALL 100
Interior Floo	12	HARDWOOD 60
Interior Floo	14	CARPET 40
Air Condition	03	CENTRAL 100
Heating Type	04	AIR DUCTED 100
Bedrooms		3 100
Bathrooms		2.5 100
Frame	02	WOOD FRAME 100
Stories	1.	1. 100
Units		0 100
Occupancy	00	NONE 100
Quality	03	Quality Level 03

DOR CODE 0100 SINGLE FAMILY
MAP NUM | MKT AREA 04
NEIGHBORHOOD/LOC 4015.00

AREA TYPE	TOTAL GROSS AREA	PCT OF BASE	TOT ADJ AREA	SUBAREA MARKET VALUE
BAS	2,339	100	2,339	320,707
BAS	770	100	770	105,577
FGR	511	55	281	38,529
FGR	504	55	277	37,980
FOP	32	30	10	1,372
FSP	159	40	64	8,775
TOTALS	4,315		3,741	512,939

MARKET ADJUSTMENTS

TYPE	MDL	EFF. AREA	TOT ADJ PTS	EFF. BASE RATE	REPL. COST NEW	AYB	EYB	ECON	FNCT		NORM	% COND
0500	01	3,741	99.9000	149.85	560,589	2001	2006	0	0	0	8.50	91.50

1 SFR CUST – 100% - 2021 Heated Area: 3109 HX Base Yr 2021

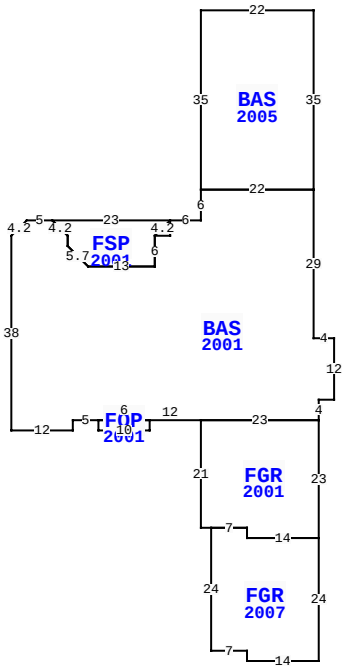

97144 WOODSTORK LN, FERNANDINA BEACH

BLD DATE		LGL DATE	
XF DATE		LAND DATE	03/19/2024 MLU
INC DATE		AG DATE	

VALUATION SUMMARY

VALUATION BY		STANDARD
Tax Group: 7	Tax Dist:	
BUILDING MARKET VALUE		512,939
TOTAL MARKET OB/XF VALUE		55,736
TOTAL LAND VALUE - MARKET		150,000
TOTAL MARKET VALUE		718,675
SOH/AGL Deduction		263,223
ASSESSED VALUE		455,452
TOTAL EXEMPTION VALUE	HX HB	50,000
BASE TAXABLE VALUE		405,452
TOTAL JUST VALUE		718,675
NCON VALUE		0
INCOME VALUE		
PREVIOUS YEAR MKT VALUE		673,359

PERMIT NUM	DESCRIPTION	AMT	ISSUED
M2113203	H/AC	0	01/06/2021
M1806835	H/AC	0	07/03/2018
R1707036	REPAIR/RRF	26,225	11/01/2017
R10486	REPAIR/RRF	6,500	06/01/2007
P014628	NEW CONSTR	0	04/01/2001

SALES DATA

OFF RECORD Number	DATE	TYPE INST	Q U	V I	RSN CD	SALE PRICE
2402/1579	10/15/2020	WD	Q	I	02	650,000
GRANTOR: WEINSIER JAMES F & MA						
GRANTEE: LESSMAN BONNIE						
1365/1656	11/08/2005	WD	U	I	20	620,000
GRANTOR: TARTAGLIONE-WILSON JI						
GRANTEE: WEINSIER JAMES F &						

BUILDING NOTES

BUILDING DIMENSIONS

BAS=[YR=2001;ORIG=0,0] W22 S6 W6 D3L3 S6 W13 U4L4 N2 U3L3 W5 D3L3 S38 E12 N2 E5 E2 N2 E6 S2 E12 E23 N4 E3 N12 W4 N29 $
BAS=[YR=2005;ORIG=0,0] N35 W22 S35 E22 $
FGR=[YR=2001;ORIG=-22,45] S21 E2 E7 S2 E14 N23 W23 $
FGR=[YR=2007;ORIG=-20,66] S24 E7 S2 E14 N24 W14 N2 W7 $
FSP=[YR=2001;ORIG=-28,6] W23 D3R3 S2 D4R4 E13 N6 E3 N3 $
FOP=[YR=2001;ORIG=-42,45] S2 E10 N2 W2 N2 W6 S2 W2 $
.

EXTRA FEATURES

LN	OB/XF CODE	DESCRIPTION	BLD	CAP	L	W	UNITS	UT	Adj R	ADJ UNIT PRICE	ORIG COND	YEAR ON	YEAR ACTUAL	Q	% COND	OB/XF MKT VALUE	NOTES
1	0500	FP-PRE FAB	0	100	0	0	1.00	UT	3,500.00	3,500.00	100	2001	2001	3	85	2,975	
2	1242	WD DECK A	0	100	0	0	192.00	SF	10.00	10.00	100	2001	2001	3	20	384	
3	0845	KOOL DECK	0	100	0	0	764.00	SF	7.25	7.25	100	2004	2004	3	84	4,653	
4	0871	POOL HTR R	0	100	0	0	1.00	UT	2,000.00	2,000.00	100	2004	2004	3	22	440	
5	0861	POOL GUNIT	0	100	0	0	512.00	SF	85.00	85.00	100	2004	2004	3	36	15,667	
6	0911	SCRN RM A	0	100	29	42	1,218.00	SF	17.50	17.50	100	2004	2004	3	22	4,689	
7	0855	CONC PAVER	0	100	0	0	3,060.00	SF	10.00	10.00	100	2007	2007	3	88	26,928	

LAND DESCRIPTION

TOTAL OB/XF 55,736

LN	USE CODE	CLS	LAND USE DESCRIPTION	CAP	RD	LOC ZONE	FRONT	DEPTH	TOT LND UTS	UNIT TYPE	DT	DPTH FACT	% COND	TOT ADJ	UNIT PRICE	ADJ UNIT PRICE	LAND VALUE	OTHER ADJUSTMENTS AND NOTES	YEAR	DENSITY	DECL	FRZ	YR	CONSRV
1	000100	C	SFR	100		PUD	0.00	0.00	1.00	LT		1.00	1.00	1.00	150,000.00	150,000.00	150,000							

REVIEW DATE 01/10/2020 BY TWA Total Acres: 0.00 Total Land Value: 150,000 Market: 0 Agricultural: 0 Common: 150,000 PRINTED 08/06/2024 BY SYS