LOT 49
IN OR 1704/152
MARSH LAKES PB 5/159-167

FURSE THOMAS W & CAROLYN R
96220 MARSH LAKES DRIVE
FERNANDINA BEACH, FL 32034

2024

37-2N-28-1320-0049-0000

BUILDING CHARACTERISTICS

ELEMENT	CD	CONSTRUCTION
Exterior Wall	16	WD FR STUC 80
Exterior Wall	31	HARDIE BRD 20
Roof Structur	08	IRREGULAR 100
Roof Cover	03	COMP SHNGL 100
Interior Wall	05	DRYWALL 100
Interior Floo	15	HARDTILE 70
Interior Floo	14	CARPET 30
Air Condition	03	CENTRAL 100
Heating Type	04	AIR DUCTED 100
Bedrooms		3 100
Bathrooms		2 100
Frame	02	WOOD FRAME 100
Stories	1.	1. 100
Units		0 100
Occupancy	00	NONE 100
Quality	03	Quality Level 03
DOR CODE	0100	SINGLE FAMILY
MAP NUM		MKT AREA 04
NEIGHBORHOOD/LOC	4015.00	

AREA TYPE	TOTAL GROSS AREA	PCT OF BASE	TOT ADJ AREA	SUBAREA MARKET VALUE
BAS	2,073	100	2,073	301,665
FGR	672	55	370	53,843
FOP	60	30	18	2,620
FOP	420	30	126	18,336
FUS	408	100	408	59,373
PTO	64	5	3	437
STR	45	10	4	582
UOP	32	20	6	873
UOP	40	20	8	1,164
TOTALS	3,814		3,016	438,891

MARKET ADJUSTMENTS

TYPE	MDL	EFF. AREA	TOT ADJ PTS	EFF. BASE RATE	REPL. COST NEW	AYB	EYB	ECON	FNCT		NORM	% COND
0500	01	3,016	107.7320	161.60	487,386	1999	2003	0	0	0	9.95	90.05

1 SFR CUST – 100% - 2000 Heated Area: 2481 HX Base Yr 2000

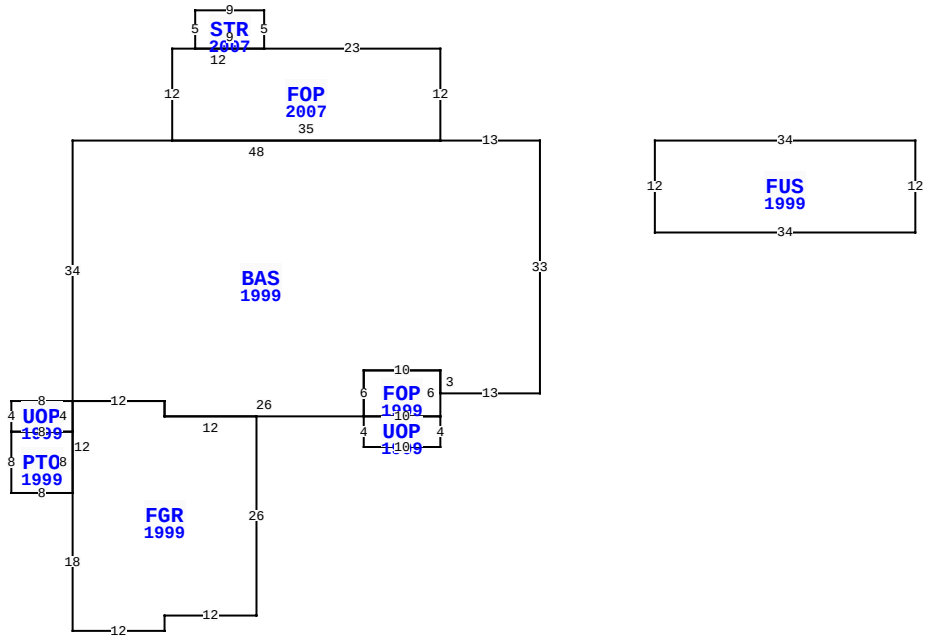

96220 MARSH LAKES DR, FERNANDINA BEACH

BLD DATE		LGL DATE	
XF DATE		LAND DATE	03/19/2024 MLU
INC DATE		AG DATE	

NASSAU COUNTY PROPERTY

PAGE 1 of 1 7

VALUATION SUMMARY

VALUATION BY		STANDARD
Tax Group: 7	Tax Dist:	
BUILDING MARKET VALUE		438,891
TOTAL MARKET OB/XF VALUE		14,544
TOTAL LAND VALUE - MARKET		350,000
TOTAL MARKET VALUE		803,435
SOH/AGL Deduction		431,795
ASSESSED VALUE		371,640
TOTAL EXEMPTION VALUE	HX HB	50,000
BASE TAXABLE VALUE		321,640
TOTAL JUST VALUE		803,435
NCON VALUE		0
INCOME VALUE		
PREVIOUS YEAR MKT VALUE		629,368

PERMIT NUM	DESCRIPTION	AMT	ISSUED
R2007998	REPAIR/RRF	27,104	09/01/2020
9805314	NEW CONSTR	126,443	08/01/1998

SALES DATA

OFF RECORD Number	DATE	TYPE INST	Q U	V I	RSN CD	SALE PRICE
1704/0152	7/06/2010	WD	U	I	30	100
GRANTOR: FURSE THOMAS W & CARO						
GRANTEE: FURSE THOMAS W & CA						
0781/0355	1/02/1997	WD	Q	V		41,000
GRANTOR: AMELIA ISLAND COMAPNY						
GRANTEE: FURSE THOMAS W & CA						

BUILDING NOTES

BUILDING DIMENSIONS

BAS=[YR=1999] W13 FOP=[YR=2007] N12 W23 STR=[YR=2007] N5 W9 S5 E9$ W12 S12 E35 $ W48 S34 UOP=[YR=1999] W8 S4 PTO=[YR=1999] S8 E8 FGR=[YR=1999] S18 E12 N2 E12 N26 W12 N2 W12 S12 $ N8 W8 $ E8 N4$ E12 S2 E26 UOP=[YR=1999] S4 E10 N4 FOP=[YR=1999] N6 W10 S6 E10 $ W10 $ N6 E10 S3 E13 N33 $ PTR=E15 FUS=[YR=1999] E34 S12 W34 N12 $W15 $.

EXTRA FEATURES

LN	OB/XF CODE	DESCRIPTION	BLD	CAP	L	W	UNITS	UT	Adj R	ADJ UNIT PRICE	ORIG COND	YEAR ON	YEAR ACTUAL	Q	% COND	OB/XF MKT VALUE	NOTES
1	0810	CONCRETE A	0	100	9	4	36.00	SF	6.50	6.50	100	1999	1999	3	77	180	
2	0810	CONCRETE A	0	100	0	0	2,870.00	SF	6.50	6.50	100	1999	1999	3	77	14,364	

LAND DESCRIPTION

TOTAL OB/XF 14,544

LN	USE CODE	CLS	LAND USE DESCRIPTION	CAP	RD	LOC ZONE	FRONT	DEPTH	TOT LND UTS	UNIT TYPE	DT	DPTH FACT	% COND	TOT ADJ	UNIT PRICE	ADJ UNIT PRICE	LAND VALUE	OTHER ADJUSTMENTS AND NOTES	YEAR	DENSITY	DECL	FRZ	YR	CONSRV
1	000116	C	SFR MARSH	100		PUD	0.00	0.00	1.00	LT		1.00	1.00	1.00	350,000.00	350,000.00	350,000							

REVIEW DATE 06/25/2020 BY KWA Total Acres: 0.00 Total Land Value: 350,000 Market: 0 Agricultural: 0 Common: 350,000 PRINTED 08/06/2024 BY SYS