LOT 7
IN OR 1694/284
MARSH LAKES PB 5/159-167

EVANS JAMES R & SHIRLEY L
96068 MARSH LAKES DRIVE
FERNANDINA BEACH, FL 32034

2024

37-2N-28-1320-0007-0000

NASSAU COUNTY PROPERTY

BUILDING CHARACTERISTICS

ELEMENT	CD	CONSTRUCTION
Exterior Wall	12	CEDAR 100
Roof Structur	03	GABLE/HIP 100
Roof Cover	03	COMP SHNGL 100
Interior Wall	05	DRYWALL 100
Interior Floo	12	HARDWOOD 70
Interior Floo	14	CARPET 30
Air Condition	03	CENTRAL 100
Heating Type	04	AIR DUCTED 100
Bedrooms		4 100
Bathrooms		3 100
Frame	02	WOOD FRAME 100
Stories	2.	2. 100
Units		0 100
Occupancy	00	NONE 100
Quality	03	Quality Level 03
DOR CODE	0100	SINGLE FAMILY
MAP NUM		MKT AREA 04
NEIGHBORHOOD/LOC	4015.00	

AREA TYPE	TOTAL GROSS AREA	PCT OF BASE	TOT ADJ AREA	SUBAREA MARKET VALUE
BAS	1,256	100	1,256	168,163
BAS	504	100	504	67,480
DCK	140	10	14	1,874
FGR	520	55	286	38,292
FOP	96	30	29	3,882
FSP	272	40	109	14,594
FUS	864	100	864	115,679
STR	24	10	2	268
STR	42	10	4	536
TOTALS	3,718		3,068	410,768

MARKET ADJUSTMENTS

TYPE	MDL	EFF. AREA	TOT ADJ PTS	EFF. BASE RATE	REPL. COST NEW	AYB	EYB	ECON	FNCT		NORM	% COND
0500	01	3,068	106.2600	159.39	489,009	1991	1991	0	0	0	16.00	84.00

1 SFR CUST – 100% - 2011 Heated Area: 2624 HX Base Yr 2011

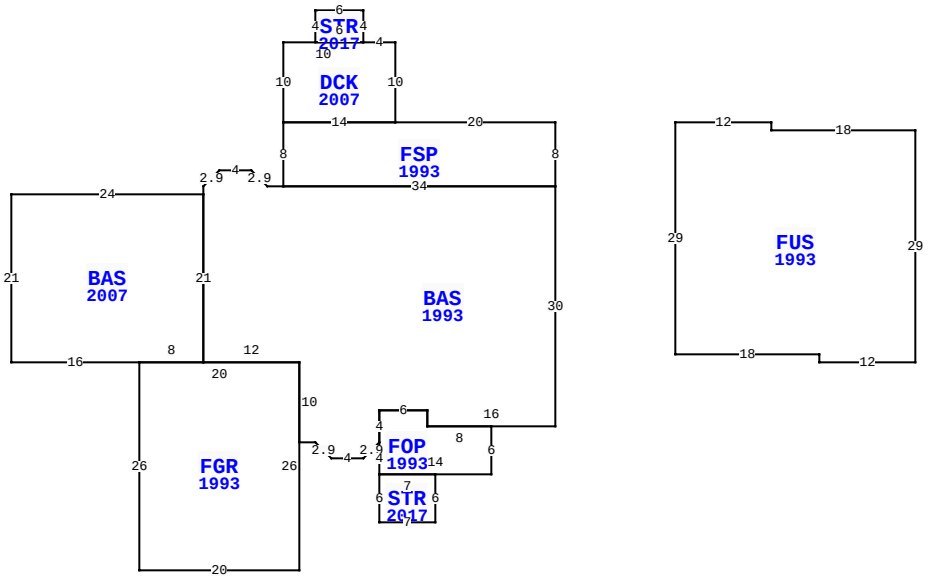

96068 MARSH LAKES DR, FERNANDINA BEACH

BLD DATE		LGL DATE	
XF DATE		LAND DATE	03/19/2024 MLU
INC DATE		AG DATE	

VALUATION SUMMARY

VALUATION BY		STANDARD
Tax Group: 7	Tax Dist:	
BUILDING MARKET VALUE		410,768
TOTAL MARKET OB/XF VALUE		6,726
TOTAL LAND VALUE - MARKET		250,000
TOTAL MARKET VALUE		667,494
SOH/AGL Deduction		312,914
ASSESSED VALUE		354,580
TOTAL EXEMPTION VALUE	HX HB	50,000
BASE TAXABLE VALUE		304,580
TOTAL JUST VALUE		667,494
NCON VALUE		0
INCOME VALUE		
PREVIOUS YEAR MKT VALUE		486,359

PERMIT NUM	DESCRIPTION	AMT	ISSUED
P1216232	REMODEL	0	11/01/2012
B1226537	REMODEL	10,000	10/01/2012
B24352	REPAIR/RRF	6,000	02/01/2011
B20614	NEW CONSTR	103,399	10/01/2007
B20014	REMODEL	69,430	06/01/2007
M0509908	H/AC	0	06/01/2005

SALES DATA

OFF RECORD Number	DATE	TYPE INST	Q / U	V / I	RSN CD	SALE PRICE
1694/0284	8/16/2010	WD	Q	I	01	390,000
GRANTOR: ANDERSON SHELDON & MA						
GRANTEE: EVANS JAMES R & SHI						
1320/1724	5/31/2005	QC	U	I	01	166,300
GRANTOR: VAN METER MARJORIE						
GRANTEE: ANDERSON MARJORIE &						

BUILDING NOTES

BUILDING DIMENSIONS

FSP=[YR=1993] W20 DCK=[YR=2007] N10 W4 STR=[YR=2017] N4 W6 S4 E6$ W10 S10 E14$ W14 S8 BAS=[YR=1993] W2 L2 U2 W4 D2 L2 S1 BAS=[YR=2007] W24 S21 E16 FGR=[YR=1993] S26 E20 N26 W20$ E8 N21$ S21 E12 S10 E2 R2 D2 E4 U2 R2 FOP=[YR=1993] S4STR=[YR=2017] S6 E7 N6 W7$ E14 N6 W8N2 W6 S4 $ N4 E6 S2 E16 N30 W34$ E34 N8 $ PTR=E15 FUS=[YR=1993] E12 S1E18 S29 W12 N1 W18 N29$ W15$.

EXTRA FEATURES

LN	OB/XF CODE	DESCRIPTION	BLD	CAP	L	W	UNITS	UT	Adj R	ADJ UNIT PRICE	ORIG COND	YEAR ON	YEAR ACTUAL	Q	% COND	OB/XF MKT VALUE	NOTES
1	0812	CONCRETE C	0	100	0	0	1,724.00	SF	4.00	4.00	100	1991	1991	3	62	4,276	
2	0500	FP-PRE FAB	0	100	0	0	1.00	UT	3,500.00	3,500.00	100	1991	1991	3	70	2,450	

LAND DESCRIPTION

TOTAL OB/XF 6,726

LN	USE CODE	CLS	LAND USE DESCRIPTION	CAP	RD	LOC ZONE	FRONT	DEPTH	TOT LND UTS	UNIT TYPE	DT	DPTH FACT	% COND	TOT ADJ	UNIT PRICE	ADJ UNIT PRICE	LAND VALUE	OTHER ADJUSTMENTS AND NOTES	YEAR	DENSITY	DECL	FRZ	YR	CONSRV
1	000116	C	SFR MARSH	100		PUD	0.00	0.00	1.00	LT		1.00	1.00	1.00	250,000.00	250,000.00	250,000							

REVIEW DATE 05/12/2019 BY KBA Total Acres: 0.00 Total Land Value: 250,000 Market: 0 Agricultural: 0 Common: 250,000 PRINTED 08/06/2024 BY SYS