PT JOHN LOWE MILL GRANTS
SEC 37-2N-27E & 51-3N-27E
IN OR 2407/1161(EX UTIL ESMT'S

CF COURTNEY ISLES LLC
C/O CF REAL EST SERVICES LLC, 710 PEACHTREE ST NE STE #100
ATLANTA, GA 30308

2024

37-2N-27-0000-0001-0260

NASSAU COUNTY PROPERTY

BUILDING CHARACTERISTICS

ELEMENT	CD	CONSTRUCTION
Exterior Wall	10	ABOVE AVG 100
Roof Structur	08	IRREGULAR 100
Roof Cover	03	COMP SHNGL 100
Interior Wall	05	DRYWALL 100
Interior Floo	14	CARPET 70
Interior Floo	11	CLAY TILE 30
Air Condition	03	CENTRAL 100
Heating Type	04	AIR DUCTED 100
Bedrooms		2 100
Bathrooms		2 100
Frame	02	WOOD FRAME 100
Story Height		10 100
RMS		0 100
Units		39 100
Quality	03	Quality Level 03

DOR CODE 0300 MULTI-FAMILY
MAP NUM | MKT AREA 04
NEIGHBORHOOD/LOC 4002.00

AREA TYPE	TOTAL GROSS AREA	PCT OF BASE	TOT ADJ AREA	SUBAREA MARKET VALUE
BAS	13,492	100	13,492	2,216,024
FOP	5,076	30	1,523	250,149
FSP	1,992	55	1,096	180,015
FST	813	55	447	73,419
FUS	27,364	100	27,364	4,494,463
STR	448	10	45	7,391
UST	24	45	11	1,807
TOTALS	49,209		43,978	7,223,268

MARKET ADJUSTMENTS

TYPE	MDL	EFF. AREA	TOT ADJ PTS	EFF. BASE RATE	REPL. COST NEW	AYB	EYB	ECON	FNCT		NORM	% COND
0302	03	43,978	102.9800	176.61	7,766,955	2008	2008	0	0	0	7.00	93.00

1 APART/LUX – 0% - 0 Heated Area: 40856 HX Base Yr

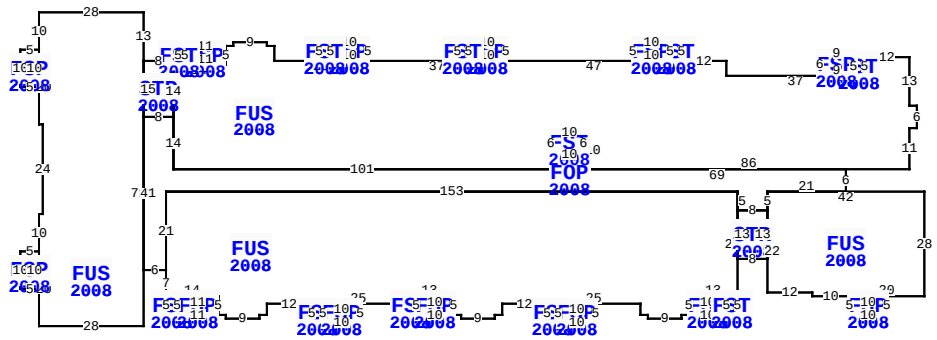

86015 COURTNEY ISLES WAY, YULEE

BLD DATE	03/03/2021	KK	LGL DATE	
XF DATE	03/03/2021	KK	LAND DATE	03/03/2021 KK
INC DATE	04/29/2024	REA	AG DATE	

NASSAU COUNTY PROPERTY — VALUATION SUMMARY

VALUATION BY	DIRECT_CAP
Tax Group: 4	Tax Dist:
BUILDING MARKET VALUE	34,279,666
TOTAL MARKET OB/XF VALUE	0
TOTAL LAND VALUE - MARKET	0
TOTAL MARKET VALUE	37,260,507
SOH/AGL Deduction	0
ASSESSED VALUE	37,260,507
TOTAL EXEMPTION VALUE	0
BASE TAXABLE VALUE	37,260,507
TOTAL JUST VALUE	37,260,507
NCON VALUE	0
INCOME VALUE	37,260,507
PREVIOUS YEAR MKT VALUE	45,702,363

PERMIT NUM	DESCRIPTION	AMT	ISSUED
C20274	CO ISSUED	412,909	09/11/2008
C20277	CO ISSUED	1,340,658	09/11/2008
E20417	ELEC OTHER	1,000	01/01/2008
M13422	MECH OTHER	0	11/01/2007
M13440	MECH OTHER	0	11/01/2007
M13441	MECH OTHER	0	11/01/2007

SALES DATA

OFF RECORD Number	DATE	TYPE INST	Q / U	V / I	RSN CD	SALE PRICE
2407/1161	11/10/2020	SW	Q	I	01	37,320,000
GRANTOR: RAIA FL SPE GROUP IV						
GRANTEE: CF COURTNEY ISLES L						
2056/0003	6/28/2016	SW	U	I	11	100
GRANTOR: DUDLEY JOHNNY L, DANI						
GRANTEE: COURTNEY ISLES LLC						

BUILDING NOTES

BUILDING DIMENSIONS

BAS=[YR=2008] 13492$ FST=[YR=2008] 393$ FSP=[YR=2008] 664$
FOP=[YR=2008] 2184$ UST=[YR=2008] 24$ FLR=2 FUS=[YR=2008] W12
FST=[YR=2008] W3 FSP=[YR=2008] N1W9S6E9N5$S5E3N5$S5W37N4W12
FST=[YR=2008] N5W3 FSP=[YR=2008] W10S5E10N5$S5E3$W47
FSP=[YR=2008] N5W10 FST=[YR=2008] W3S5E3N5$S5E10$W37
FSP=[YR=2008] N5W10 FST=[YR=2008]
W3S5E3N5$S5E10$W25N4W2N1W9S1W2 FSP=[YR=2008] W11
FST=[YR=2008] W3S5E3N5$ S5E11N5$S5W14 STR=[YR=2008] N1W8
FUS=[YR=2008] N13W28S10 FSP=[YR=2008]
W5S10E5N10$S20E1S24W1S10 FSP=[YR=2008] W5S10E5N10$S20E28N71$
S15E8N14$S14 FOP=[YR=2008] W8S41E6 FUS=[YR=2008] S7
FST=[YR=2008] S5E3 FSP=[YR=2008]

EXTRA FEATURES

LN	OB/XF CODE	DESCRIPTION	BLD	CAP	L	W	UNITS	UT	Adj R	ADJ UNIT PRICE	ORIG COND	YEAR ON	YEAR ACTUAL	Q	% COND	OB/XF MKT VALUE	NOTES
1	0803	ASPHALT C	0	0	0	0	153,110.00	SF	2.00	2.00	100	2008	2008	3	62	189,856	
2	0400	CONC CURB	0	0	0	0	4,970.00	LF	15.00	15.00	100	2008	2008	3	92	68,586	
3	0402	CONC BUMPE	0	0	0	0	20.00	UT	25.00	25.00	100	2008	2008	3	92	460	
4	0810	CONCRETE A	0	0	0	0	16,912.00	SF	6.50	6.50	100	2008	2008	3	89	97,836	
5	0812	CONCRETE C	0	0	0	0	13,383.00	SF	4.00	4.00	100	2008	2008	3	89	47,643	
6	0963	FIRE HYDR	0	0	0	0	9.00	UT	1,500.00	1,500.00	100	2008	2008	3	100	13,500	
7	0972	ST LGHT UN	0	0	0	0	27.00	UT	2,530.00	2,530.00	100	2008	2008	3	74	50,549	
8	0975	ST LT/ARM	0	0	0	0	6.00	UT	500.00	500.00	100	2008	2008	3	74	2,220	
9	0422	CL FNC 4'	0	0	0	0	383.00	LF	17.25	17.25	100	2008	2008	3	74	4,889	
10	1126	CB/STC 8"	0	0	36	6	216.00	SF	8.00	8.00	100	2008	2008	3	89	1,538	

TOTAL OB/XF 477,077

LAND DESCRIPTION

LN	USE CODE	CLS	LAND USE DESCRIPTION	CAP	RD	LOC ZONE	FRONT	DEPTH	TOT LND UTS	UNIT TYPE	DT	DPTH FACT	% COND	TOT ADJ	UNIT PRICE	ADJ UNIT PRICE	LAND VALUE	OTHER ADJUSTMENTS AND NOTES	YEAR	DENSITY	DECL	FRZ	YR	CONSRV
1	000300	C	MULTI-FAM	0		RG-2	0.00	0.00	240.00	UT		1.00	1.00	1.00	15,000.00	15,000.00	3,656,189							

REVIEW DATE 03/03/2021 BY TW Total Acres: 0.00 Total Land Value: 2,980,841 Market: 0 Agricultural: 0 Common: 0 PRINTED 08/06/2024 BY SYS

PT JOHN LOWE MILL GRANTS
SEC 37-2N-27E & 51-3N-27E
IN OR 2407/1161(EX UTIL ESMT'S

CF COURTNEY ISLES LLC
C/O CF REAL EST SERVICES LLC, 710 PEACHTREE ST NE STE #100
ATLANTA, GA 30308

2024

37-2N-27-0000-0001-0260

BUILDING CHARACTERISTICS

ELEMENT	CD	CONSTRUCTION
Exterior Wall	10	ABOVE AVG 100
Roof Structur	08	IRREGULAR 100
Roof Cover	03	COMP SHNGL 100
Interior Wall	05	DRYWALL 100
Interior Floo	14	CARPET 70
Interior Floo	11	CLAY TILE 30
Air Condition	03	CENTRAL 100
Heating Type	04	AIR DUCTED 100
Bedrooms		2 100
Bathrooms		2 100
Frame	02	WOOD FRAME 100
Story Height		10 100
RMS		0 100
Units		39 100
Quality	03	Quality Level 03

DOR CODE	0300	MULTI-FAMILY	
MAP NUM		MKT AREA	04
NEIGHBORHOOD/LOC	4002.00		

AREA TYPE	TOTAL GROSS AREA	PCT OF BASE	TOT ADJ AREA	SUBAREA MARKET VALUE
BAS	13,492	100	13,492	2,216,024
FLR	2	0	0	0
FLR	3	0	0	0
FOP	1,446	30	434	71,284
FOP	1,446	30	434	71,284
FOP	2,184	30	655	107,582
FSP	50	55	28	4,599
FSP	50	55	28	4,599
FSP	50	55	28	4,599
FSP	50	55	28	4,599
TOTALS	49,214		43,981	7,223,760

MARKET ADJUSTMENTS

TYPE	MDL	EFF. AREA	TOT ADJ PTS	EFF. BASE RATE	REPL. COST NEW	AYB	EYB	ECON	FNCT		NORM	% COND
0302	03	43,981	102.9800	176.61	7,767,484	2008	2008	0	0	0	7.00	93.00

2 APART/LUX – 0% - 0 Heated Area: 40856 HX Base Yr

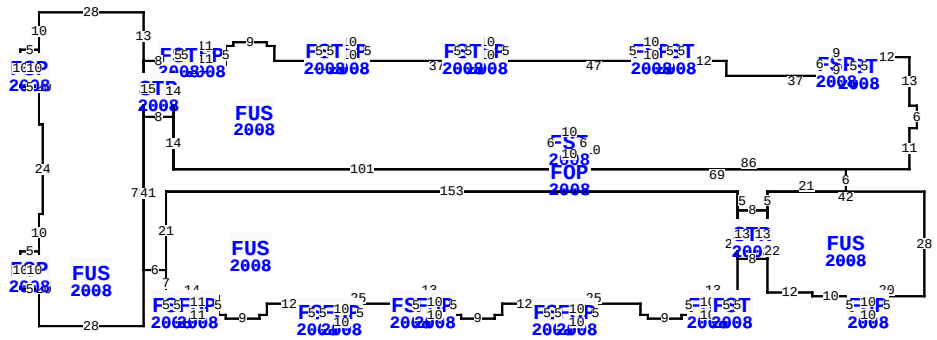

** This building has 69 Sub-Areas

86015 COURTNEY ISLES WAY, YULEE

BLD DATE	03/03/2021	KK	LGL DATE	
XF DATE	03/03/2021	KK	LAND DATE	03/03/2021 KK
INC DATE	04/29/2024	REA	AG DATE	

NASSAU COUNTY PROPERTY

VALUATION SUMMARY

VALUATION BY	DIRECT_CAP
Tax Group: 4	Tax Dist:
BUILDING MARKET VALUE	34,279,666
TOTAL MARKET OB/XF VALUE	0
TOTAL LAND VALUE - MARKET	0
TOTAL MARKET VALUE	37,260,507
SOH/AGL Deduction	0
ASSESSED VALUE	37,260,507
TOTAL EXEMPTION VALUE	0
BASE TAXABLE VALUE	37,260,507
TOTAL JUST VALUE	37,260,507
NCON VALUE	0
INCOME VALUE	37,260,507
PREVIOUS YEAR MKT VALUE	45,702,363

PERMIT NUM	DESCRIPTION	AMT	ISSUED
M13442	MECH OTHER	0	11/01/2007
M13443	MECH OTHER	0	11/01/2007
M13444	MECH OTHER	0	11/01/2007
M13445	MECH OTHER	0	11/01/2007
M13446	MECH OTHER	0	11/01/2007
M13447	MECH OTHER	0	11/01/2007

SALES DATA

OFF RECORD Number	DATE	TYPE INST	Q U	V I	RSN CD	SALE PRICE
2407/1161	11/10/2020	SW	Q	I	01	37,320,000
GRANTOR: RAIA FL SPE GROUP IV						
GRANTEE: CF COURTNEY ISLES L						
2056/0003	6/28/2016	SW	U	I	11	100
GRANTOR: DUDLEY JOHNNY L, DANI						
GRANTEE: COURTNEY ISLES LLC						

BUILDING NOTES

BUILDING DIMENSIONS

BAS=[YR=2008] 13492$ FST=[YR=2008] 393$ FSP=[YR=2008] 664$
FOP=[YR=2008] 2184$ UST=[YR=2008] 24$ FLR=2 FUS=[YR=2008] W12
FST=[YR=2008] W3 FSP=[YR=2008] N1W9S6E9N5$S5E3 N5$S5W37N4W12
FST=[YR=2008] N5W3 FSP=[YR=2008] W10S5E10N5$S5E3$W47
FSP=[YR=2008] N5W10 FST=[YR=2008] W3S5E3N5$S5E10 $W37
FSP=[YR=2008] N5W10 FST=[YR=2008]
W3S5E3N5$S5E10$W25N4W2N1W9S1W2 FSP=[YR=2008] W11
FST=[YR=2008] W3S5E3N5$ S5 E11N5$S5W14 STR=[YR=2008] N1W8
FUS=[YR=2008] N13W28S10 FSP=[YR=2008] W5 S10E5N
10$S20E1S24W1S10 FSP=[YR=2008] W5S10E5N10$S20E28N71$
S15E8N14$S14 FOP=[YR=2008] W8S41E6 FUS=[YR=2008] S7
FST=[YR=2008] S5E3 FSP=[YR=2008]

EXTRA FEATURES

LN	OB/XF CODE	DESCRIPTION	BLD	CAP	L	W	UNITS	UT	Adj R	ADJ UNIT PRICE	ORIG COND	YEAR ON	YEAR ACTUAL	Q	% COND	OB/XF MKT VALUE	NOTES
11	1126	CB/STC 8"	0	0	83	9	747.00	SF	8.00	8.00	100	2008	2008	3	89	5,319	
12	0463	FENCE GATE	0	0	0	0	4.00	UT	900.00	900.00	100	2008	2008	3	74	2,664	
13	4950	BOLLARD	0	0	0	0	2.00	UT	100.00	100.00	100	2008	2008	3	100	200	
14	0861	POOL GUNIT	0	0	0	0	1,513.00	SF	85.00	85.00	100	2008	2008	3	52	66,875	
15	0872	POOL HTR C	0	0	0	0	1.00	UT	6,000.00	6,000.00	100	2008	2008	3	35	2,100	
16	0881	FOUNTAIN	0	0	9	9	1.00	UT	0.00	0.00	100	2008	2008	3	100	15,000	
17	0648	LIGHTS-AV	0	0	0	0	5.00	UT	140.00	140.00	100	2008	2008	3	35	245	
18	0649	LIGHTS-GD	0	0	0	0	12.00	SF	225.00	225.00	100	2008	2008	3	35	945	
19	0855	CONC PAVER	0	0	0	0	8,797.00	SF	10.00	10.00	100	2008	2008	3	89	78,293	
20	0462	ST/AL FNC	0	0	0	0	2,500.00	SF	10.00	10.00	100	2008	2008	3	52	13,000	

TOTAL OB/XF 184,641

LAND DESCRIPTION

LN	USE CODE	CLS	LAND USE DESCRIPTION	CAP	RD	LOC ZONE	FRONT	DEPTH	TOT LND UTS	UNIT TYPE	DT	DPTH FACT	% COND	TOT ADJ	UNIT PRICE	ADJ UNIT PRICE	LAND VALUE	OTHER ADJUSTMENTS AND NOTES	YEAR	DENSITY	DECL	FRZ	YR	CONSRV

REVIEW DATE 03/03/2021 BY TW Total Acres: 0.00 Total Land Value: 2,980,841 Market: 0 Agricultural: 0 Common: 0 PRINTED 08/06/2024 BY SYS

PT JOHN LOWE MILL GRANTS
SEC 37-2N-27E & 51-3N-27E
IN OR 2407/1161(EX UTIL ESMT'S

CF COURTNEY ISLES LLC
C/O CF REAL EST SERVICES LLC, 710 PEACHTREE ST NE STE #100
ATLANTA, GA 30308

2024

37-2N-27-0000-0001-0260

NASSAU COUNTY PROPERTY

BUILDING CHARACTERISTICS

ELEMENT	CD	CONSTRUCTION
Exterior Wall	10	ABOVE AVG 100
Roof Structur	08	IRREGULAR 100
Roof Cover	03	COMP SHNGL 100
Interior Wall	05	DRYWALL 100
Interior Floo	14	CARPET 70
Interior Floo	11	CLAY TILE 30
Air Condition	03	CENTRAL 100
Heating Type	04	AIR DUCTED 100
Bedrooms		2 100
Bathrooms		2 100
Frame	02	WOOD FRAME 100
Story Height		10 100
RMS		0 100
Units		20 100
Quality	03	Quality Level 03

DOR CODE 0300 MULTI-FAMILY
MAP NUM | MKT AREA 04
NEIGHBORHOOD/LOC 4002.00

AREA TYPE	TOTAL GROSS AREA	PCT OF BASE	TOT ADJ AREA	SUBAREA MARKET VALUE
BAS	7,798	100	7,798	1,294,289
FOP	1,032	30	310	51,453
FSP	1,360	55	748	124,151
FST	192	55	106	17,594
FUS	10,902	100	10,902	1,809,482
STR	384	10	38	6,307
UST	28	45	13	2,158
TOTALS	21,696		19,915	3,305,434

MARKET ADJUSTMENTS

TYPE	MDL	EFF. AREA	TOT ADJ PTS	EFF. BASE RATE	REPL. COST NEW	AYB	EYB	ECON	FNCT		NORM	% COND
0302	03	19,915	104.0640	178.47	3,554,230	2008	2008	0	0	0	7.00	93.00

3 APART/LUX – 0% - 0 Heated Area: 18700 HX Base Yr

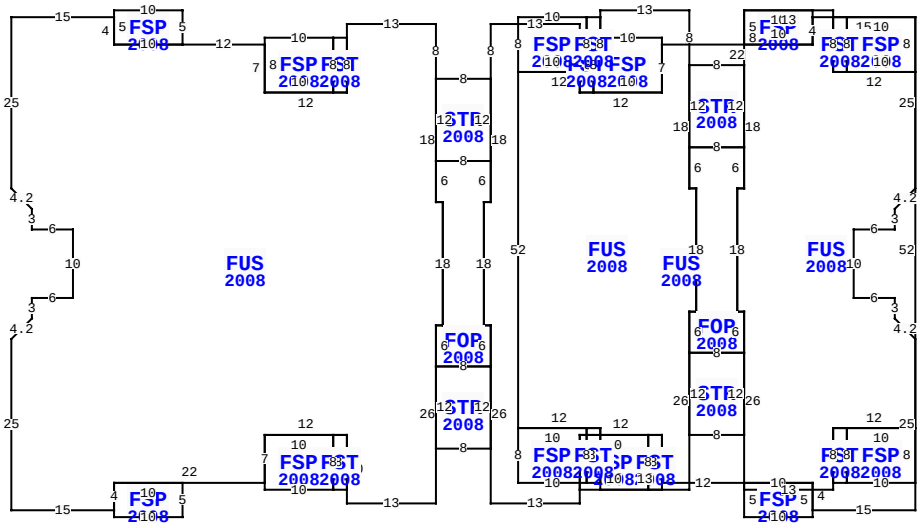

86015 COURTNEY ISLES WAY, YULEE

BLD DATE	03/03/2021	KK	LGL DATE	
XF DATE	03/03/2021	KK	LAND DATE	03/03/2021 KK
INC DATE	04/29/2024	REA	AG DATE	

EXTRA FEATURES

LN	OB/XF CODE	DESCRIPTION	BLD	CAP	L	W	UNITS	UT	Adj R	ADJ UNIT PRICE	ORIG COND	YEAR ON	YEAR ACTUAL	Q	% COND	OB/XF MKT VALUE	NOTES
21	1075	TRELLIS G	0	0	12	12	144.00	SF	35.00	35.00	100	2008	2008	3	52	2,621	
22	0600	SUMMER KIT	0	0	0	0	2.00	UT	5,000.00	5,000.00	100	2008	2008	3	35	3,500	
23	0478	VF 6 SLAT	0	0	30	0	30.00	LF	15.00	15.00	100	2008	2008	3	74	333	
24	0500	FP-PRE FAB	0	0	0	0	1.00	UT	3,500.00	3,500.00	100	2008	2008	3	92	3,220	
25	0351	CARPORT MT	0	0	16	24	384.00	SF	10.00	10.00	100	2008	2008	3	35	1,344	
26	0966	FIRE SPRNK	0	0	0	0	40,856.00	SF	3.00	3.00	100	2008	2008	3	89	109,086	
27	0966	FIRE SPRNK	0	0	0	0	40,856.00	SF	3.00	3.00	100	2008	2008	3	89	109,086	
28	0966	FIRE SPRNK	0	0	0	0	18,700.00	SF	3.00	3.00	100	2008	2008	3	89	49,929	
29	0966	FIRE SPRNK	0	0	0	0	40,856.00	SF	3.00	3.00	100	2008	2008	3	89	109,086	
30	0966	FIRE SPRNK	0	0	0	0	24,284.00	SF	3.00	3.00	100	2008	2008	3	89	64,838	

VALUATION SUMMARY

VALUATION BY	DIRECT_CAP
Tax Group: 4	Tax Dist:
BUILDING MARKET VALUE	34,279,666
TOTAL MARKET OB/XF VALUE	0
TOTAL LAND VALUE - MARKET	0
TOTAL MARKET VALUE	37,260,507
SOH/AGL Deduction	0
ASSESSED VALUE	37,260,507
TOTAL EXEMPTION VALUE	0
BASE TAXABLE VALUE	37,260,507
TOTAL JUST VALUE	37,260,507
NCON VALUE	0
INCOME VALUE	37,260,507
PREVIOUS YEAR MKT VALUE	45,702,363

PERMIT NUM	DESCRIPTION	AMT	ISSUED
M13448	MECH OTHER	0	11/01/2007
M13449	MECH OTHER	0	11/01/2007
R10828	REPAIR/RRF	5,000	11/01/2007
R10829	REPAIR/RRF	5,000	11/01/2007
R10830	REPAIR/RRF	2,000	11/01/2007
R10831	REPAIR/RRF	1,000	11/01/2007

SALES DATA

OFF RECORD Number	DATE	TYPE INST	Q U	V I	RSN CD	SALE PRICE
2407/1161	11/10/2020	SW	Q	I	01	37,320,000
GRANTOR: RAIA FL SPE GROUP IV						
GRANTEE: CF COURTNEY ISLES L						
2056/0003	6/28/2016	SW	U	I	11	100
GRANTOR: DUDLEY JOHNNY L, DANI						
GRANTEE: COURTNEY ISLES LLC						

BUILDING NOTES

BUILDING DIMENSIONS

BAS=[YR=2008] 7798$FSP=[YR=2008] 520$ FST=[YR=2008]
64$FOP=[YR=2008] 624$ UST=[YR=2008] 28 $FLR=2 FUS=[YR=2008]
W15 FSP=[YR=2008] N1W10S5E10N4$S4W22 FSP=[YR=2008] N1W10
FST=[YR=2008] W2S8E2N8$S8E10N7$S7W12N10W13S8 STR=[YR=2008]
W8 FUS=[YR=2008] N8W13S2 FST=[YR=2008] W2 FSP=[YR=2008]
W10S8E10N8$S8E2N8$S8W12N7W12 FSP=[YR=2008]
N5W10S5E10$W10N4W15S25 D3 R3 S3E6S10W6S3 D3 L3 S25E15
FSP=[YR=2008] S1E10N5W10S4$N4E22 FSP=[YR=2008] S1E10
FST=[YR=2008] E2N8W2S8$N8W10S7$
N7E12S10E13N26E1N18W1N18$S12E8 FOP=[YR=2008] W8S6E1S18W1S6E8
STR=[YR=2008] W8S12E8N12$N6W1N18E1N6$N12$S18W1S18E1S26E13N2
FSP=[YR=2008] E10 FST=[YR=2008] E2N8W2S8$ N8W10S8$N8E12S7E12

LAND DESCRIPTION

TOTAL OB/XF 453,043

LN	USE CODE	CLS	LAND USE DESCRIPTION	CAP	RD	LOC ZONE	FRONT	DEPTH	TOT LND UTS	UNIT TYPE	DT	DPTH FACT	% COND	TOT ADJ	UNIT PRICE	ADJ UNIT PRICE	LAND VALUE	OTHER ADJUSTMENTS AND NOTES	YEAR	DENSITY	DECL	FRZ	YR	CONSRV

REVIEW DATE 03/03/2021 BY TW Total Acres: 0.00 Total Land Value: 2,980,841 Market: 0 Agricultural: 0 Common: 0 PRINTED 08/06/2024 BY SYS

PT JOHN LOWE MILL GRANTS
SEC 37-2N-27E & 51-3N-27E
IN OR 2407/1161(EX UTIL ESMT'S

CF COURTNEY ISLES LLC
C/O CF REAL EST SERVICES LLC, 710 PEACHTREE ST NE STE #100
ATLANTA, GA 30308

2024

37-2N-27-0000-0001-0260

BUILDING CHARACTERISTICS

ELEMENT	CD	CONSTRUCTION
Exterior Wall	10	ABOVE AVG 100
Roof Structur	08	IRREGULAR 100
Roof Cover	03	COMP SHNGL 100
Interior Wall	05	DRYWALL 100
Interior Floo	14	CARPET 70
Interior Floo	11	CLAY TILE 30
Air Condition	03	CENTRAL 100
Heating Type	04	AIR DUCTED 100
Bedrooms		2 100
Bathrooms		2 100
Frame	02	WOOD FRAME 100
Story Height		10 100
RMS		0 100
Units		39 100
Quality	03	Quality Level 03

DOR CODE 0300 MULTI-FAMILY
MAP NUM | MKT AREA 04
NEIGHBORHOOD/LOC 4002.00

AREA TYPE	TOTAL GROSS AREA	PCT OF BASE	TOT ADJ AREA	SUBAREA MARKET VALUE
BAS	13,492	100	13,492	2,216,024
FOP	5,076	30	1,523	250,149
FSP	1,992	55	1,096	180,015
FST	813	55	447	73,419
FUS	27,364	100	27,364	4,494,463
STR	448	10	45	7,391
UST	24	45	11	1,807
TOTALS	49,209		43,978	7,223,268

MARKET ADJUSTMENTS

TYPE	MDL	EFF. AREA	TOT ADJ PTS	EFF. BASE RATE	REPL. COST NEW	AYB	EYB	ECON	FNCT		NORM	% COND
0302	03	43,978	102.9800	176.61	7,766,955	2008	2008	0	0	0	7.00	93.00

4 APART/LUX – 0% - 0 Heated Area: 40856 HX Base Yr
Code not found: parcel[25401] -> bld[46260] -> bld_area[?].cd -> lu_bld_area[FS P]

86015 COURTNEY ISLES WAY, YULEE

BLD DATE	03/03/2021	KK	LGL DATE	
XF DATE	03/03/2021	KK	LAND DATE	03/03/2021 KK
INC DATE	04/29/2024	REA	AG DATE	

NASSAU COUNTY PROPERTY

PAGE 4 of 20 4

VALUATION SUMMARY

VALUATION BY	DIRECT_CAP
Tax Group: 4	Tax Dist:
BUILDING MARKET VALUE	34,279,666
TOTAL MARKET OB/XF VALUE	0
TOTAL LAND VALUE - MARKET	0
TOTAL MARKET VALUE	37,260,507
SOH/AGL Deduction	0
ASSESSED VALUE	37,260,507
TOTAL EXEMPTION VALUE	0
BASE TAXABLE VALUE	37,260,507
TOTAL JUST VALUE	37,260,507
NCON VALUE	0
INCOME VALUE	37,260,507
PREVIOUS YEAR MKT VALUE	45,702,363

PERMIT NUM	DESCRIPTION	AMT	ISSUED
R10832	REPAIR/RRF	5,000	11/01/2007
R10833	REPAIR/RRF	5,000	11/01/2007
R10834	REPAIR/RRF	1,000	11/01/2007
R10835	REPAIR/RRF	5,000	11/01/2007
R10836	REPAIR/RRF	500	11/01/2007
R10837	REPAIR/RRF	1,000	11/01/2007

SALES DATA

OFF RECORD Number	DATE	TYPE INST	Q U	V I	RSN CD	SALE PRICE
2407/1161	11/10/2020	SW	Q	I	01	37,320,000
GRANTOR: RAIA FL SPE GROUP IV						
GRANTEE: CF COURTNEY ISLES L						
2056/0003	6/28/2016	SW	U	I	11	100
GRANTOR: DUDLEY JOHNNY L, DANI						
GRANTEE: COURTNEY ISLES LLC						

BUILDING NOTES

EXTRA FEATURES

LN	OB/XF CODE	DESCRIPTION	BLD	CAP	L	W	UNITS	UT	Adj R	ADJ UNIT PRICE	ORIG COND	YEAR ON	YEAR ACTUAL	Q	% COND	OB/XF MKT VALUE	NOTES
31	0966	FIRE SPRNK	0	0	0	0	18,700.00	SF	3.00	3.00	100	2008	2008	3	89	49,929	
32	0966	FIRE SPRNK	0	0	0	0	187,000.00	SF	3.00	3.00	100	2008	2008	3	89	499,290	
33	0966	FIRE SPRNK	0	0	0	0	18,700.00	SF	3.00	3.00	100	2008	2008	3	89	49,929	
34	0966	FIRE SPRNK	0	0	0	0	18,700.00	SF	3.00	3.00	100	2008	2008	3	89	49,929	
35	0966	FIRE SPRNK	0	0	0	0	4,617.00	SF	3.00	3.00	100	2008	2008	3	89	12,327	

BUILDING DIMENSIONS

BAS=[YR=2008] 13492$ FST=[YR=2008] 393$ FS P2008=664$
FOP=[YR=2008] 2184$ UST=[YR=2008] 24$ FLR=2 FUS=[YR=2008] W12
FST=[YR=2008] W3 FSP=[YR=2008] N1W9S6E9N5$S5E3N5$S5W37N4W12
FST=[YR=2008] N5W3 FSP=[YR=2008] W10S5E10N5$S5E3$W47
FSP=[YR=2008] N5W10 FST=[YR=2008] W3S5E3N5$S5E10$W37
FSP=[YR=2008] N5W10 FST=[YR=2008]
W3S5E3N5$S5E10$W25N4W2N1W9S1W2 FSP=[YR=2008] W11
FST=[YR=2008] W3S5E3N5$ S5 E11N5$S5W14 STR=[YR=2008] N1W8
FUS=[YR=2008] N13W28S10 FSP=[YR=2008]
W5S10E5N10$S20E1S24W1S10 FSP=[YR=2008] W5S10E5N10$S20E28N71$
S15E8N14$S14 FOP=[YR=2008] W8S41E6 FUS=[YR=2008] S7
FST=[YR=2008] S5E3 FSP=[YR=2008]

LAND DESCRIPTION

TOTAL OB/XF 661,404

LN	USE CODE	CLS	LAND USE DESCRIPTION	CAP	RD	LOC ZONE	FRONT	DEPTH	TOT LND UTS	UNIT TYPE	DT	DPTH FACT	% COND	TOT ADJ	UNIT PRICE	ADJ UNIT PRICE	LAND VALUE	OTHER ADJUSTMENTS AND NOTES	YEAR	DENSITY	DECL	FRZ	YR	CONSRV

REVIEW DATE 03/03/2021 BY TW Total Acres: 0.00 Total Land Value: 2,980,841 Market: 0 Agricultural: 0 Common: 0 PRINTED 08/06/2024 BY SYS

PT JOHN LOWE MILL GRANTS
SEC 37-2N-27E & 51-3N-27E
IN OR 2407/1161(EX UTIL ESMT'S

CF COURTNEY ISLES LLC
C/O CF REAL EST SERVICES LLC, 710 PEACHTREE ST NE STE #100
ATLANTA, GA 30308

2024

37-2N-27-0000-0001-0260

NASSAU COUNTY PROPERTY

BUILDING CHARACTERISTICS

ELEMENT	CD	CONSTRUCTION
Exterior Wall	10	ABOVE AVG 100
Roof Structur	08	IRREGULAR 100
Roof Cover	03	COMP SHNGL 100
Interior Wall	05	DRYWALL 100
Interior Floo	14	CARPET 70
Interior Floo	11	CLAY TILE 30
Air Condition	03	CENTRAL 100
Heating Type	04	AIR DUCTED 100
Bedrooms		2 100
Bathrooms		2 100
Frame	02	WOOD FRAME 100
Story Height		10 100
RMS		0 100
Units		20 100
Quality	03	Quality Level 03

DOR CODE	0300	MULTI-FAMILY	
MAP NUM		MKT AREA	04
NEIGHBORHOOD/LOC	4002.00		

AREA TYPE	TOTAL GROSS AREA	PCT OF BASE	TOT ADJ AREA	SUBAREA MARKET VALUE
BAS	10,030	100	10,030	1,647,400
FGR	506	55	278	45,661
FOP	1,104	30	331	54,366
FSP	1,456	55	801	131,562
FST	168	55	92	15,111
FUS	14,254	100	14,254	2,341,181
STR	384	10	38	6,241
UST	21	45	9	1,478
TOTALS	27,923		25,833	4,243,000

MARKET ADJUSTMENTS

TYPE	MDL	EFF. AREA	TOT ADJ PTS	EFF. BASE RATE	REPL. COST NEW	AYB	EYB	ECON	FNCT		NORM	% COND
0302	03	25,833	102.9800	176.61	4,562,366	2008	2008	0	0	0	7.00	93.00

5 APART/LUX – 0% - 0 Heated Area: 24284 HX Base Yr

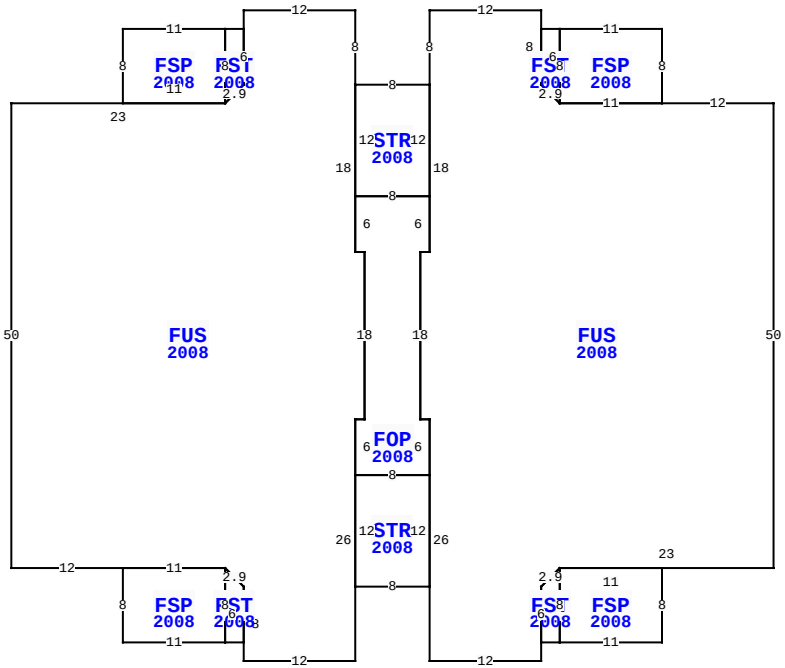

86015 COURTNEY ISLES WAY, YULEE

BLD DATE	03/03/2021	KK	LGL DATE		
XF DATE	03/03/2021	KK	LAND DATE	03/03/2021	KK
INC DATE	04/29/2024	REA	AG DATE		

VALUATION SUMMARY

VALUATION BY	DIRECT_CAP
Tax Group: 4	Tax Dist:
BUILDING MARKET VALUE	34,279,666
TOTAL MARKET OB/XF VALUE	0
TOTAL LAND VALUE - MARKET	0
TOTAL MARKET VALUE	37,260,507
SOH/AGL Deduction	0
ASSESSED VALUE	37,260,507
TOTAL EXEMPTION VALUE	0
BASE TAXABLE VALUE	37,260,507
TOTAL JUST VALUE	37,260,507
NCON VALUE	0
INCOME VALUE	37,260,507
PREVIOUS YEAR MKT VALUE	45,702,363

PERMIT NUM	DESCRIPTION	AMT	ISSUED
R10838	REPAIR/RRF	100	11/01/2007
R10839	REPAIR/RRF	1,000	11/01/2007
R10840	REPAIR/RRF	1,000	11/01/2007
R10841	REPAIR/RRF	5,000	11/01/2007
R10842	REPAIR/RRF	1,000	11/01/2007
R10843	REPAIR/RRF	5,000	11/01/2007

SALES DATA

OFF RECORD Number	DATE	TYPE INST	Q / U	V / I	RSN CD	SALE PRICE
2407/1161	11/10/2020	SW	Q	I	01	37,320,000
GRANTOR: RAIA FL SPE GROUP IV						
GRANTEE: CF COURTNEY ISLES L						
2056/0003	6/28/2016	SW	U	I	11	100
GRANTOR: DUDLEY JOHNNY L, DANI						
GRANTEE: COURTNEY ISLES LLC						

BUILDING NOTES

EXTRA FEATURES

L N	OB/XF CODE	DESCRIPTION	BLD	CAP	L	W	UNITS	UT	Adj R	ADJ UNIT PRICE	ORIG COND	YEAR ON	YEAR ACTUAL	Q	% COND	OB/XF MKT VALUE	NOTES

BUILDING DIMENSIONS

FLR=1 BAS=[YR=2008] 10030$FSP=[YR=2008] 552$FST=[YR=2008] 56$FOP=[YR=2008] 646$ FGR=[YR=2008] 506$UST=[YR=2008] 21$ FLR=2 FUS=[YR=2008] 10030$FSP=[YR=2008] 552$ FST=[YR=2008] 56$STR=[YR=2008] 192$ FOP=[YR=2008] 254$ FLR=3FUS=[YR=2008] W12 FSP=[YR=2008] N8W11 FST=[YR=2008] W2S6 D2 R2 N8$S8E11$W11 U2 L2 N8W12S8 STR=[YR=2008] W8 FUS=[YR=2008] N8W12S2 FST=[YR=2008] W2 FSP=[YR=2008] W11S8E11N8$ S8 R2 U2 N6$S6 D2 L2 W23S50E12 FSP=[YR=2008] S8 E11 FST=[YR=2008] E2N6 U2 L2 S8$N8W11$E11 R2 D2 S8E12N26 E1N18W1N18$ S12E8 FOP=[YR=2008] W8S6 E1S18W1S6E8 STR=[YR=2008] W8S12E8N12 $N6W1N18E1N6$N12$S18W1S18E1S26 E12N2 FST=[YR=2008] E2 FSP=[YR=2008] E11N8 W11S8$N8 D2 L2 S6$N6 U2 R2 E23 N50$.

LAND DESCRIPTION

TOTAL OB/XF 0

L N	USE CODE	CLS	LAND USE DESCRIPTION	CAP	R D	LOC ZONE	FRONT	DEPTH	TOT LND UTS	UNIT TYPE	D T	DPTH FACT	% COND	TOT ADJ	UNIT PRICE	ADJ UNIT PRICE	LAND VALUE	OTHER ADJUSTMENTS AND NOTES	YEAR	DENSITY	DECL	FRZ	YR	CONSRV

REVIEW DATE 03/03/2021 BY TW Total Acres: 0.00 Total Land Value: 2,980,841 Market: 0 Agricultural: 0 Common: 0 PRINTED 08/06/2024 BY SYS

PT JOHN LOWE MILL GRANTS
SEC 37-2N-27E & 51-3N-27E
IN OR 2407/1161(EX UTIL ESMT'S

CF COURTNEY ISLES LLC
C/O CF REAL EST SERVICES LLC, 710 PEACHTREE ST NE STE #100
ATLANTA, GA 30308

2024

37-2N-27-0000-0001-0260

BUILDING CHARACTERISTICS

ELEMENT	CD	CONSTRUCTION
Exterior Wall	10	ABOVE AVG 100
Roof Structur	08	IRREGULAR 100
Roof Cover	03	COMP SHNGL 100
Interior Wall	05	DRYWALL 100
Interior Floo	14	CARPET 70
Interior Floo	11	CLAY TILE 30
Air Condition	03	CENTRAL 100
Heating Type	04	AIR DUCTED 100
Bedrooms		2 100
Bathrooms		2 100
Frame	02	WOOD FRAME 100
Story Height		10 100
RMS		0 100
Units		20 100
Quality	03	Quality Level 03

DOR CODE 0300 MULTI-FAMILY
MAP NUM | MKT AREA 04
NEIGHBORHOOD/LOC 4002.00

AREA TYPE	TOTAL GROSS AREA	PCT OF BASE	TOT ADJ AREA	SUBAREA MARKET VALUE
BAS	7,798	100	7,798	1,294,289
FOP	1,032	30	310	51,453
FSP	1,360	55	748	124,151
FST	192	55	106	17,594
FUS	10,902	100	10,902	1,809,482
STR	384	10	38	6,307
UST	28	45	13	2,158
TOTALS	21,696		19,915	3,305,434

MARKET ADJUSTMENTS

TYPE	MDL	EFF. AREA	TOT ADJ PTS	EFF. BASE RATE	REPL. COST NEW	AYB	EYB	ECON	FNCT		NORM	% COND
0302	03	19,915	104.0640	178.47	3,554,230	2008	2008	0	0	0	7.00	93.00

6 APART/LUX – 0% - 0 Heated Area: 18700 HX Base Yr

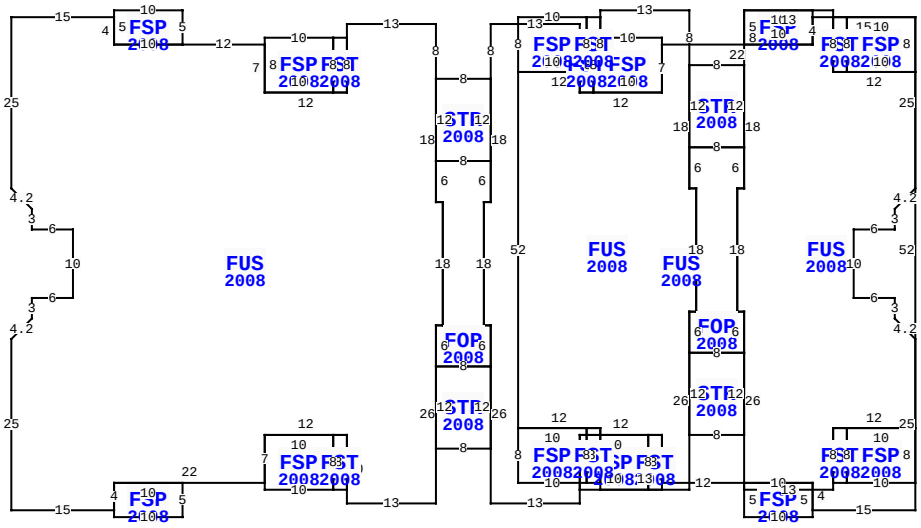

86015 COURTNEY ISLES WAY, YULEE

BLD DATE	03/03/2021	KK	LGL DATE	
XF DATE	03/03/2021	KK	LAND DATE	03/03/2021 KK
INC DATE	04/29/2024	REA	AG DATE	

EXTRA FEATURES

L N	OB/XF CODE	DESCRIPTION	BLD	CAP	L	W	UNITS	UT	Adj R	ADJ UNIT PRICE	ORIG COND	YEAR ON	YEAR ACTUAL	Q	% COND	OB/XF MKT VALUE	NOTES

NASSAU COUNTY PROPERTY

PAGE 6 of 20 4

VALUATION SUMMARY

VALUATION BY	DIRECT_CAP
Tax Group: 4	Tax Dist:
BUILDING MARKET VALUE	34,279,666
TOTAL MARKET OB/XF VALUE	0
TOTAL LAND VALUE - MARKET	0
TOTAL MARKET VALUE	37,260,507
SOH/AGL Deduction	0
ASSESSED VALUE	37,260,507
TOTAL EXEMPTION VALUE	0
BASE TAXABLE VALUE	37,260,507
TOTAL JUST VALUE	37,260,507
NCON VALUE	0
INCOME VALUE	37,260,507
PREVIOUS YEAR MKT VALUE	45,702,363

PERMIT NUM	DESCRIPTION	AMT	ISSUED
R10844	REPAIR/RRF	1,000	11/01/2007
R10845	REPAIR/RRF	5,000	11/01/2007
R10846	REPAIR/RRF	1,000	11/01/2007
R10847	REPAIR/RRF	5,000	11/01/2007
R10848	REPAIR/RRF	5,000	11/01/2007
B20637	SWIM POOL	118,210	10/01/2007

SALES DATA

OFF RECORD Number	DATE	TYPE INST	Q U	V I	RSN CD	SALE PRICE
2407/1161	11/10/2020	SW	Q	I	01	37,320,000
GRANTOR: RAIA FL SPE GROUP IV						
GRANTEE: CF COURTNEY ISLES L						
2056/0003	6/28/2016	SW	U	I	11	100
GRANTOR: DUDLEY JOHNNY L, DANI						
GRANTEE: COURTNEY ISLES LLC						

BUILDING NOTES

BUILDING DIMENSIONS

BAS=[YR=2008] 7798$FSP=[YR=2008] 520$ FST=[YR=2008]
64$FOP=[YR=2008] 624$ UST=[YR=2008] 28 $FLR=2 FUS=[YR=2008]
W15 FSP=[YR=2008] N1 W 10S5E10 N4$S4W22 FSP=[YR=2008] N1W10
FST=[YR=2008] W2S8E2N8$S8E10N7$S7 W 12N10W13S8 STR=[YR=2008]
W8 FUS=[YR=2008] N8W13S2 FST=[YR=2008] W2 FSP=[YR=2008]
W10S8E10N8$S8E2N8$S8W12N7W12 FSP=[YR=2008]
N5W10S5E10$W10N4W15S25 D3 R3 S3E6S10W6S3 D3 L3 S25E15
FSP=[YR=2008] S1E10N5W10S4$N4E22 FSP=[YR=2008] S1 E10
FST=[YR=2008] E2N8W2S8$N8W10S7$
N7E12S10E13N26E1N18W1N18$S12E8 FOP=[YR=2008] W8S6E1S18W1S6E8
STR=[YR=2008] W8S12E8N12$N6W1N18E1 N6$N12$S18W1S18E1S26E13N2
FSP=[YR=2008] E10 FST=[YR=2008] E2N8W2S8$N8W10S8$N8E12S7E12

LAND DESCRIPTION

TOTAL OB/XF 0

L N	USE CODE	CLS	LAND USE DESCRIPTION	CAP	R D	LOC ZONE	FRONT	DEPTH	TOT LND UTS	UNIT TYPE	D T	DPTH FACT	% COND	TOT ADJ	UNIT PRICE	ADJ UNIT PRICE	LAND VALUE	OTHER ADJUSTMENTS AND NOTES	YEAR	DENSITY	DECL	FRZ	YR	CONSRV

REVIEW DATE 03/03/2021 BY TW Total Acres: 0.00 Total Land Value: 2,980,841 Market: 0 Agricultural: 0 Common: 0 PRINTED 08/06/2024 BY SYS

PT JOHN LOWE MILL GRANTS
SEC 37-2N-27E & 51-3N-27E
IN OR 2407/1161(EX UTIL ESMT'S

CF COURTNEY ISLES LLC
C/O CF REAL EST SERVICES LLC, 710 PEACHTREE ST NE STE #100
ATLANTA, GA 30308

2024

37-2N-27-0000-0001-0260

BUILDING CHARACTERISTICS

ELEMENT	CD	CONSTRUCTION
Exterior Wall	10	ABOVE AVG 100
Roof Structur	08	IRREGULAR 100
Roof Cover	03	COMP SHNGL 100
Interior Wall	05	DRYWALL 100
Interior Floo	14	CARPET 70
Interior Floo	11	CLAY TILE 30
Air Condition	03	CENTRAL 100
Heating Type	04	AIR DUCTED 100
Bedrooms		2 100
Bathrooms		2 100
Frame	02	WOOD FRAME 100
Story Height		10 100
RMS		0 100
Units		20 100
Quality	03	Quality Level 03

DOR CODE 0300 MULTI-FAMILY
MAP NUM | MKT AREA 04
NEIGHBORHOOD/LOC 4002.00

AREA TYPE	TOTAL GROSS AREA	PCT OF BASE	TOT ADJ AREA	SUBAREA MARKET VALUE
BAS	7,798	100	7,798	1,294,289
FOP	1,032	30	310	51,453
FSP	1,360	55	748	124,151
FST	192	55	106	17,594
FUS	10,902	100	10,902	1,809,482
STR	384	10	38	6,307
UST	28	45	13	2,158
TOTALS	21,696		19,915	3,305,434

MARKET ADJUSTMENTS

TYPE	MDL	EFF. AREA	TOT ADJ PTS	EFF. BASE RATE	REPL. COST NEW	AYB	EYB	ECON	FNCT		NORM	% COND
0302	03	19,915	104.0640	178.47	3,554,230	2008	2008	0	0	0	7.00	93.00

7 APART/LUX – 0% - 0 Heated Area: 18700 HX Base Yr

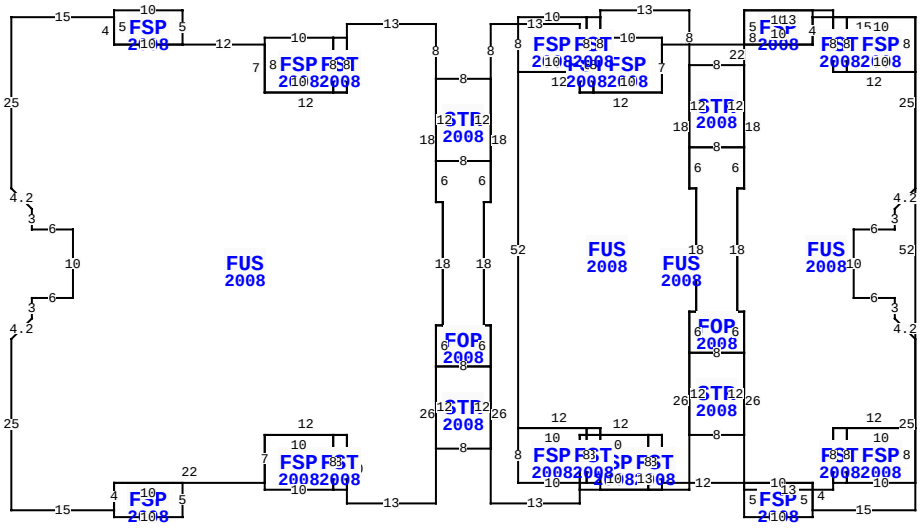

86015 COURTNEY ISLES WAY, YULEE

BLD DATE	03/03/2021	KK	LGL DATE	
XF DATE	03/03/2021	KK	LAND DATE	03/03/2021 KK
INC DATE	04/29/2024	REA	AG DATE	

NASSAU COUNTY PROPERTY

PAGE 7 of 20 4

VALUATION SUMMARY

VALUATION BY	DIRECT_CAP
Tax Group: 4	Tax Dist:
BUILDING MARKET VALUE	34,279,666
TOTAL MARKET OB/XF VALUE	0
TOTAL LAND VALUE - MARKET	0
TOTAL MARKET VALUE	37,260,507
SOH/AGL Deduction	0
ASSESSED VALUE	37,260,507
TOTAL EXEMPTION VALUE	0
BASE TAXABLE VALUE	37,260,507
TOTAL JUST VALUE	37,260,507
NCON VALUE	0
INCOME VALUE	37,260,507
PREVIOUS YEAR MKT VALUE	45,702,363

PERMIT NUM	DESCRIPTION	AMT	ISSUED
E19748	ELEC OTHER	10,000	08/01/2007
E19760	ELEC OTHER	2,000	08/01/2007
E19761	ELEC OTHER	2,000	08/01/2007
E19762	ELEC OTHER	2,000	08/01/2007
E19766	ELEC OTHER	1,500	08/01/2007
E19809	ELEC OTHER	78,000	08/01/2007

SALES DATA

OFF RECORD Number	DATE	TYPE INST	Q / U	V / I	RSN CD	SALE PRICE
2407/1161	11/10/2020	SW	Q	I	01	37,320,000
GRANTOR: RAIA FL SPE GROUP IV						
GRANTEE: CF COURTNEY ISLES L						
2056/0003	6/28/2016	SW	U	I	11	100
GRANTOR: DUDLEY JOHNNY L, DANI						
GRANTEE: COURTNEY ISLES LLC						

BUILDING NOTES

BUILDING DIMENSIONS

BAS=[YR=2008] 7798$ FSP=[YR=2008] 520$ FST=[YR=2008] 64$
FOP=[YR=2008] 624$ UST=[YR=2008] 28 $FLR=2 FUS=[YR=2008] W15
FSP=[YR=2008] N1W10S5E10N4$S4W22 FSP=[YR=2008] N1W10
FST=[YR=2008] W2S8E2N8$S8E10N7$S7W12N10W13S8 STR=[YR=2008]
W8 FUS=[YR=2008] N8W13S2 FST=[YR=2008] W2 FSP=[YR=2008]
W10S8E10N8$S8E2N8$S8W12N7W12 FSP=[YR=2008]
N5W10S5E10$W10N4W15S25 D3 R3 S3E6S10W6S3 D3 L3 S25E15
FSP=[YR=2008] S1E10N5W10S4$N4E22 FSP=[YR=2008] S1 E10
FST=[YR=2008] E2N8W2S8$N8W10S7$
N7E12S10E13N26E1N18W1N18$S12E8 FOP=[YR=2008] W8S6E1S18W1S6E8
STR=[YR=2008] W8S12E8N12$N6W1N18E1N6$N12$S18W1S18E1S26E13N2
FSP=[YR=2008] E10 FST=[YR=2008] E2N8W2S8$N8W10S8$N8E12S7E12

EXTRA FEATURES

L N	OB/XF CODE	DESCRIPTION	BLD	CAP	L	W	UNITS	UT	Adj R	ADJ UNIT PRICE	ORIG COND	YEAR ON	YEAR ACTUAL	Q	% COND	OB/XF MKT VALUE	NOTES

LAND DESCRIPTION

TOTAL OB/XF 0

L N	USE CODE	CLS	LAND USE DESCRIPTION	CAP	R D	LOC ZONE	FRONT	DEPTH	TOT LND UTS	UNIT TYPE	D T	DPTH FACT	% COND	TOT ADJ	UNIT PRICE	ADJ UNIT PRICE	LAND VALUE	OTHER ADJUSTMENTS AND NOTES	YEAR	DENSITY	DECL	FRZ	YR	CONSRV

REVIEW DATE 03/03/2021 BY TW Total Acres: 0.00 Total Land Value: 2,980,841 Market: 0 Agricultural: 0 Common: 0 PRINTED 08/06/2024 BY SYS

PT JOHN LOWE MILL GRANTS
SEC 37-2N-27E & 51-3N-27E
IN OR 2407/1161(EX UTIL ESMT'S

CF COURTNEY ISLES LLC
C/O CF REAL EST SERVICES LLC, 710 PEACHTREE ST NE STE #100
ATLANTA, GA 30308

2024

37-2N-27-0000-0001-0260

BUILDING CHARACTERISTICS

ELEMENT	CD	CONSTRUCTION
Exterior Wall	10	ABOVE AVG 100
Roof Structur	08	IRREGULAR 100
Roof Cover	03	COMP SHNGL 100
Interior Wall	05	DRYWALL 100
Interior Floo	14	CARPET 70
Interior Floo	11	CLAY TILE 30
Air Condition	03	CENTRAL 100
Heating Type	04	AIR DUCTED 100
Bedrooms		2 100
Bathrooms		2 100
Frame	02	WOOD FRAME 100
Story Height		10 100
RMS		0 100
Units		20 100
Quality	03	Quality Level 03

DOR CODE 0300 MULTI-FAMILY
MAP NUM | MKT AREA 04
NEIGHBORHOOD/LOC 4002.00

AREA TYPE	TOTAL GROSS AREA	PCT OF BASE	TOT ADJ AREA	SUBAREA MARKET VALUE
BAS	7,798	100	7,798	1,294,289
FGR	481	55	265	43,984
FOP	1,030	30	309	51,287
FSP	1,360	55	748	124,151
FST	192	55	106	17,594
FUS	10,902	100	10,902	1,809,482
STR	384	10	38	6,307
UST	28	45	13	2,158
TOTALS	22,175		20,179	3,349,252

MARKET ADJUSTMENTS

TYPE	MDL	EFF. AREA	TOT ADJ PTS	EFF. BASE RATE	REPL. COST NEW	AYB	EYB	ECON	FNCT		NORM	% COND
0302	03	20,179	104.0640	178.47	3,601,346	2008	2008	0	0	0	7.00	93.00

8 APART/LUX – 0% - 0 Heated Area: 18700 HX Base Yr

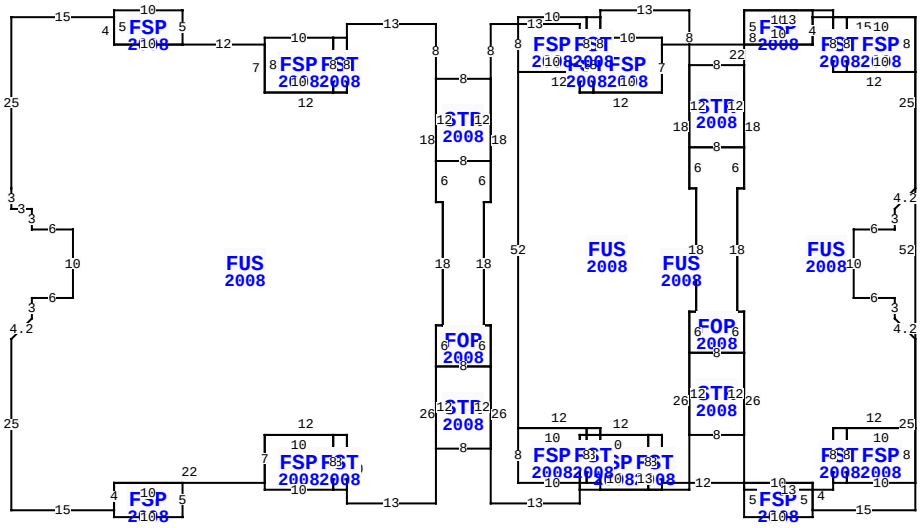

86015 COURTNEY ISLES WAY, YULEE

BLD DATE	03/03/2021	KK	LGL DATE	
XF DATE	03/03/2021	KK	LAND DATE	03/03/2021 KK
INC DATE	04/29/2024	REA	AG DATE	

NASSAU COUNTY PROPERTY

PAGE 8 of 20 4

VALUATION SUMMARY

VALUATION BY	DIRECT_CAP
Tax Group: 4	Tax Dist:
BUILDING MARKET VALUE	34,279,666
TOTAL MARKET OB/XF VALUE	0
TOTAL LAND VALUE - MARKET	0
TOTAL MARKET VALUE	37,260,507
SOH/AGL Deduction	0
ASSESSED VALUE	37,260,507
TOTAL EXEMPTION VALUE	0
BASE TAXABLE VALUE	37,260,507
TOTAL JUST VALUE	37,260,507
NCON VALUE	0
INCOME VALUE	37,260,507
PREVIOUS YEAR MKT VALUE	45,702,363

PERMIT NUM	DESCRIPTION	AMT	ISSUED
E19810	ELEC OTHER	78,000	08/01/2007
E19811	ELEC OTHER	40,000	08/01/2007
E19812	ELEC OTHER	78,000	08/01/2007
E19813	ELEC OTHER	40,000	08/01/2007
E19814	ELEC OTHER	40,000	08/01/2007
E19815	ELEC OTHER	40,000	08/01/2007

SALES DATA

OFF RECORD Number	DATE	TYPE INST	Q / U	V / I	RSN CD	SALE PRICE
2407/1161	11/10/2020	SW	Q	I	01	37,320,000
GRANTOR: RAIA FL SPE GROUP IV						
GRANTEE: CF COURTNEY ISLES L						
2056/0003	6/28/2016	SW	U	I	11	100
GRANTOR: DUDLEY JOHNNY L, DANI						
GRANTEE: COURTNEY ISLES LLC						

BUILDING NOTES

BUILDING DIMENSIONS

BAS=[YR=2008] 7798$FSP=[YR=2008] 520$ FST=[YR=2008] 64$
FOP=[YR=2008] 622$ UST=[YR=2008] 28$ FGR=[YR=2008] 481$
FLR=2FUS=[YR=2008] W15 FSP=[YR=2008] N1W10S5E10N4$S4W22
FSP=[YR=2008] N1W10 FST=[YR=2008]
W2S8E2N8$S8E10N7$S7W12N10W13S8 STR=[YR=2008] W8 FUS=[YR=2008]
N8W13S2 FST=[YR=2008] W2 FSP=[YR=2008]
W10S8E10N8$S8E2N8$S8W12N7W12 FSP=[YR=2008]
N5W10S5E10$W10N4W15S25/S3E 3/S3E6S10W6S3 D3 L3 S25E15
FSP=[YR=2008] S1E10N5W10S4$N4E22 FSP=[YR=2008] S1 E10
FST=[YR=2008] E2N8W2S8$N8W10S7$ N7E12S10E13N26E1N18W1N18$
S12E8 FOP=[YR=2008] W8S6E1S18W1S6E8 STR=[YR=2008]
W8S12E8N12$N6W1N18E1N6$N12$S18W1S18E1S26E13N2 FSP=[YR=2008]

EXTRA FEATURES

L N	OB/XF CODE	DESCRIPTION	BLD	CAP	L	W	UNITS	UT	Adj R	ADJ UNIT PRICE	ORIG COND	YEAR ON	YEAR ACTUAL	Q	% COND	OB/XF MKT VALUE	NOTES

LAND DESCRIPTION

TOTAL OB/XF 0

L N	USE CODE	CLS	LAND USE DESCRIPTION	CAP	R D	LOC ZONE	FRONT	DEPTH	TOT LND UTS	UNIT TYPE	D T	DPTH FACT	% COND	TOT ADJ	UNIT PRICE	ADJ UNIT PRICE	LAND VALUE	OTHER ADJUSTMENTS AND NOTES	YEAR	DENSITY	DECL	FRZ	YR	CONSRV

REVIEW DATE 03/03/2021 BY TW Total Acres: 0.00 Total Land Value: 2,980,841 Market: 0 Agricultural: 0 Common: 0 PRINTED 08/06/2024 BY SYS

PT JOHN LOWE MILL GRANTS
SEC 37-2N-27E & 51-3N-27E
IN OR 2407/1161(EX UTIL ESMT'S

CF COURTNEY ISLES LLC
C/O CF REAL EST SERVICES LLC, 710 PEACHTREE ST NE STE #100
ATLANTA, GA 30308

2024

37-2N-27-0000-0001-0260

BUILDING CHARACTERISTICS

ELEMENT	CD	CONSTRUCTION
Exterior Wall	10	ABOVE AVG 100
Roof Structur	08	IRREGULAR 100
Roof Cover	03	COMP SHNGL 100
Interior Wall	05	DRYWALL 100
Interior Floo	14	CARPET 70
Interior Floo	11	CLAY TILE 30
Air Condition	03	CENTRAL 100
Heating Type	04	AIR DUCTED 100
Bedrooms		2 100
Bathrooms		2 100
Frame	02	WOOD FRAME 100
Story Height		10 100
RMS		0 100
Units		20 100
Quality	03	Quality Level 03

DOR CODE 0300 MULTI-FAMILY
MAP NUM | MKT AREA 04
NEIGHBORHOOD/LOC 4002.00

AREA TYPE	TOTAL GROSS AREA	PCT OF BASE	TOT ADJ AREA	SUBAREA MARKET VALUE
BAS	7,798	100	7,798	1,294,289
FOP	1,032	30	310	51,453
FSP	1,360	55	748	124,151
FST	192	55	106	17,594
FUS	10,902	100	10,902	1,809,482
STR	384	10	38	6,307
UST	28	45	13	2,158
TOTALS	21,696		19,915	3,305,434

MARKET ADJUSTMENTS

TYPE	MDL	EFF. AREA	TOT ADJ PTS	EFF. BASE RATE	REPL. COST NEW	AYB	EYB	ECON	FNCT		NORM	% COND
0302	03	19,915	104.0640	178.47	3,554,230	2008	2008	0	0	0	7.00	93.00

9 APART/LUX – 0% - 0 Heated Area: 18700 HX Base Yr

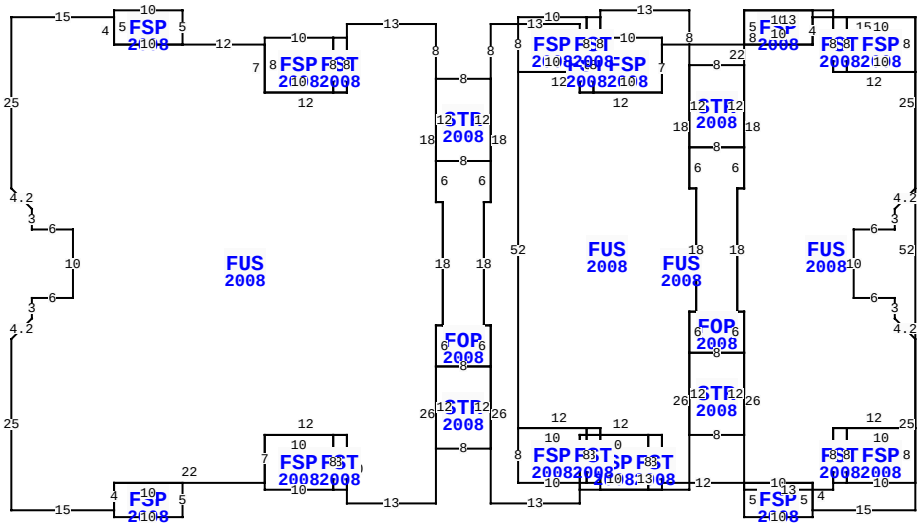

86015 COURTNEY ISLES WAY, YULEE

BLD DATE	03/03/2021	KK	LGL DATE	
XF DATE	03/03/2021	KK	LAND DATE	03/03/2021 KK
INC DATE	04/29/2024	REA	AG DATE	

NASSAU COUNTY PROPERTY

PAGE 9 of 20 4

VALUATION SUMMARY

VALUATION BY	DIRECT_CAP
Tax Group: 4	Tax Dist:
BUILDING MARKET VALUE	34,279,666
TOTAL MARKET OB/XF VALUE	0
TOTAL LAND VALUE - MARKET	0
TOTAL MARKET VALUE	37,260,507
SOH/AGL Deduction	0
ASSESSED VALUE	37,260,507
TOTAL EXEMPTION VALUE	0
BASE TAXABLE VALUE	37,260,507
TOTAL JUST VALUE	37,260,507
NCON VALUE	0
INCOME VALUE	37,260,507
PREVIOUS YEAR MKT VALUE	45,702,363

PERMIT NUM	DESCRIPTION	AMT	ISSUED
E19817	ELEC OTHER	40,000	08/01/2007
E19818	ELEC OTHER	40,000	08/01/2007
E19819	ELEC OTHER	6,000	08/01/2007
E19820	ELEC OTHER	1,200	08/01/2007
E19821	ELEC OTHER	1,000	08/01/2007
E19822	ELEC OTHER	2,000	08/01/2007

SALES DATA

OFF RECORD Number	DATE	TYPE INST	Q / U	V / I	RSN CD	SALE PRICE
2407/1161	11/10/2020	SW	Q	I	01	37,320,000
GRANTOR: RAIA FL SPE GROUP IV						
GRANTEE: CF COURTNEY ISLES L						
2056/0003	6/28/2016	SW	U	I	11	100
GRANTOR: DUDLEY JOHNNY L, DANI						
GRANTEE: COURTNEY ISLES LLC						

BUILDING NOTES

BUILDING DIMENSIONS

BAS=[YR=2008] 7798$FSP=[YR=2008] 520$ FST=[YR=2008]
64$FOP=[YR=2008] 624$ UST=[YR=2008] 28 $FLR=2 FUS=[YR=2008]
W15 FSP=[YR=2008] N1W10S5E10N4$S4W22 FSP=[YR=2008] N1W10
FST=[YR=2008] W2S8E2N8$S8E10N7$S7W12N10W13S8 STR=[YR=2008]
W8 FUS=[YR=2008] N8W13S2 FST=[YR=2008] W2 FSP=[YR=2008]
W10S8E10N8$S8E2N8$S8W12N7W12 FSP=[YR=2008]
N5W10S5E10$W10N4W15S25 D3 R3 S3E6S10W6S3 D3 L3 S25E15
FSP=[YR=2008] S1E10N5W10S4$N4E22 FSP=[YR=2008] S1 E10
FST=[YR=2008] E2N8W2S8$N8W10S7$
N7E12S10E13N26E1N18W1N18$S12E8 FOP=[YR=2008] W8S6E1S18W1S6E8
STR=[YR=2008] W8S12E8N12$N6W1N18E1N6$N12$S18W1S18E1S26E13N2
FSP=[YR=2008] E10 FST=[YR=2008] E2N8W2S8$ N8W10S8$N8E12S7E12

EXTRA FEATURES

L N	OB/XF CODE	DESCRIPTION	BLD	CAP	L	W	UNITS	UT	Adj R	ADJ UNIT PRICE	ORIG COND	YEAR ON	YEAR ACTUAL	Q	% COND	OB/XF MKT VALUE	NOTES

LAND DESCRIPTION

TOTAL OB/XF 0

L N	USE CODE	CLS	LAND USE DESCRIPTION	CAP	R D	LOC ZONE	FRONT	DEPTH	TOT LND UTS	UNIT TYPE	D T	DPTH FACT	% COND	TOT ADJ	UNIT PRICE	ADJ UNIT PRICE	LAND VALUE	OTHER ADJUSTMENTS AND NOTES	YEAR	DENSITY	DECL	FRZ	YR	CONSRV

REVIEW DATE 03/03/2021 BY TW Total Acres: 0.00 Total Land Value: 2,980,841 Market: 0 Agricultural: 0 Common: 0 PRINTED 08/06/2024 BY SYS

PT JOHN LOWE MILL GRANTS
SEC 37-2N-27E & 51-3N-27E
IN OR 2407/1161(EX UTIL ESMT'S

CF COURTNEY ISLES LLC
C/O CF REAL EST SERVICES LLC, 710 PEACHTREE ST NE STE #100
ATLANTA, GA 30308

2024

37-2N-27-0000-0001-0260

BUILDING CHARACTERISTICS

ELEMENT	CD	CONSTRUCTION
Exterior Wall	10	ABOVE AVG 100
Roof Structur	08	IRREGULAR 100
Roof Cover	03	COMP SHNGL 100
Interior Wall	05	DRYWALL 100
Interior Floo	14	CARPET 70
Interior Floo	11	CLAY TILE 30
Air Condition	03	CENTRAL 100
Heating Type	04	AIR DUCTED 100
Bedrooms		2 100
Bathrooms		2 100
Frame	02	WOOD FRAME 100
Story Height		10 100
RMS		0 100
Units		3 100
Quality	03	Quality Level 03
DOR CODE	0300	MULTI-FAMILY
MAP NUM		MKT AREA 04
NEIGHBORHOOD/LOC	4002.00	

AREA TYPE	TOTAL GROSS AREA	PCT OF BASE	TOT ADJ AREA	SUBAREA MARKET VALUE
BAS	73	100	73	12,873
BAS	73	100	73	12,873
BAS	73	100	73	12,873
FGR	647	55	356	62,780
FGR	647	55	356	62,780
FGR	647	55	356	62,780
FOP	24	30	7	1,234
FOP	30	30	9	1,588
FOP	30	30	9	1,588
FOP	50	30	15	2,645
TOTALS	6,798		5,758	1,015,404

MARKET ADJUSTMENTS

TYPE	MDL	EFF. AREA	TOT ADJ PTS	EFF. BASE RATE	REPL. COST NEW	AYB	EYB	ECON	FNCT		NORM	% COND
0302	03	5,758	110.5680	189.62	1,091,832	2008	2008	0	0	0	7.00	93.00

10 APART/LUX – 0% - 0 Heated Area: 4617 HX Base Yr

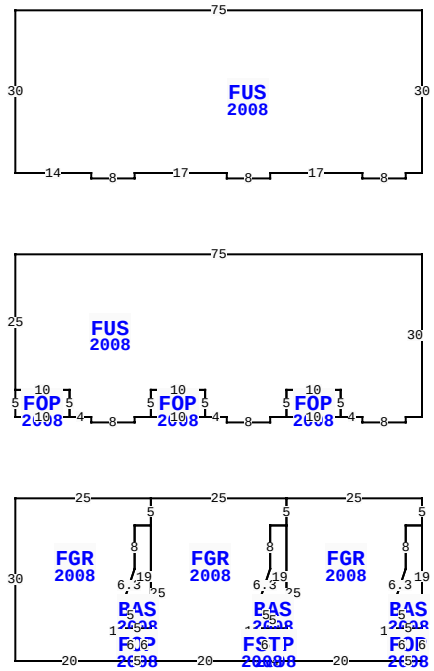

** This building has 15 Sub-Areas

86015 COURTNEY ISLES WAY, YULEE

BLD DATE	03/03/2021	KK	LGL DATE	
XF DATE	03/03/2021	KK	LAND DATE	03/03/2021 KK
INC DATE	04/29/2024	REA	AG DATE	

NASSAU COUNTY PROPERTY

PAGE 10 of 20 4

VALUATION SUMMARY

VALUATION BY	DIRECT_CAP
Tax Group: 4	Tax Dist:
BUILDING MARKET VALUE	34,279,666
TOTAL MARKET OB/XF VALUE	0
TOTAL LAND VALUE - MARKET	0
TOTAL MARKET VALUE	37,260,507
SOH/AGL Deduction	0
ASSESSED VALUE	37,260,507
TOTAL EXEMPTION VALUE	0
BASE TAXABLE VALUE	37,260,507
TOTAL JUST VALUE	37,260,507
NCON VALUE	0
INCOME VALUE	37,260,507
PREVIOUS YEAR MKT VALUE	45,702,363

PERMIT NUM	DESCRIPTION	AMT	ISSUED
E19823	ELEC OTHER	1,500	08/01/2007
E19824	ELEC OTHER	1,500	08/01/2007
E19825	ELEC OTHER	800	08/01/2007
E19826	ELEC OTHER	800	08/01/2007
E19828	ELEC OTHER	800	08/01/2007
E19832	ELEC OTHER	800	08/01/2007

SALES DATA

OFF RECORD Number	DATE	TYPE INST	Q / U	V / I	RSN CD	SALE PRICE
2407/1161	11/10/2020	SW	Q	I	01	37,320,000
GRANTOR: RAIA FL SPE GROUP IV						
GRANTEE: CF COURTNEY ISLES L						
2056/0003	6/28/2016	SW	U	I	11	100
GRANTOR: DUDLEY JOHNNY L, DANI						
GRANTEE: COURTNEY ISLES LLC						

BUILDING NOTES

BUILDING DIMENSIONS

FGR=[YR=2008] W25FGR=[YR=2008] W25FGR=[YR=2008] W25S30E20N11 U6 R2 N8E3N5$S5 BAS=[YR=2008] W3S8 D6 L2 S5E5FOP=[YR=2008] W5S6E5N6$N19$S25E20N11 R2 U6 N8 E3N5$S5BAS=[YR=2008] W3S8 D6 L2 S5E5 FOP=[YR=2008] W4FST=[YR=2008] W1S6E1N6$S6 E4N6$N19$S25E20N11 U6 R2 N8E3 BAS=[YR=2008] W3S8 D6 L2 S5E5FOP=[YR=2008] W5S6E5N6$N19$N5$ PTR=N15 FUS=[YR=2008] N30W75S25FOP=[YR=2008] S5E10 N5W10$E10S5E4S1E8N1E3FOP=[YR=2008] E10N5W10S5$N5E10S5E4S1E8N1E3 FOP=[YR=2008] E10N5W10S5$N5E10S5E4S1 E8N1E3$S15$ PTR=N60 FUS=[YR=2008] N30W75S30E14S1E8N1E17S1E8N1E17 S1E8N1E3$ S60$.

EXTRA FEATURES

L N	OB/XF CODE	DESCRIPTION	BLD	CAP	L	W	UNITS	UT	Adj R	ADJ UNIT PRICE	ORIG COND	YEAR ON	YEAR ACTUAL	Q	% COND	OB/XF MKT VALUE	NOTES

LAND DESCRIPTION

TOTAL OB/XF 0

L N	USE CODE	CLS	LAND USE DESCRIPTION	CAP	R D	LOC ZONE	FRONT	DEPTH	TOT LND UTS	UNIT TYPE	D T	DPTH FACT	% COND	TOT ADJ	UNIT PRICE	ADJ UNIT PRICE	LAND VALUE	OTHER ADJUSTMENTS AND NOTES	YEAR	DENSITY	DECL	FRZ	YR	CONSRV

REVIEW DATE 03/03/2021 BY TW Total Acres: 0.00 Total Land Value: 2,980,841 Market: 0 Agricultural: 0 Common: 0 PRINTED 08/06/2024 BY SYS

PT JOHN LOWE MILL GRANTS
SEC 37-2N-27E & 51-3N-27E
IN OR 2407/1161(EX UTIL ESMT'S

CF COURTNEY ISLES LLC
C/O CF REAL EST SERVICES LLC, 710 PEACHTREE ST NE STE #100
ATLANTA, GA 30308

2024

37-2N-27-0000-0001-0260

BUILDING CHARACTERISTICS

ELEMENT	CD	CONSTRUCTION
Exterior Wall	11	BD/BTN AVG 100
Roof Structur	04	WOOD TRUSS 100
Roof Cover	03	COMP SHNGL 100
Interior Wall	05	DRYWALL 100
Interior Floo	14	CARPET 70
Interior Floo	07	CORK/VTILE 30
Ceiling	02	F.NOT SUS 100
Air Condition	03	CENTRAL 100
Heating Type	04	AIR DUCTED 100
Fixtures		18 100
Frame	02	WOOD FRAME 100
Story Height		10 100
RMS		7 100
Stories	1.	1. 100
Units		0 100
Occupancy	00	NONE 100
Quality	03	Quality Level 03

DOR CODE	0300	MULTI-FAMILY	
MAP NUM		MKT AREA	04
NEIGHBORHOOD/LOC	4002.00		

AREA TYPE	TOTAL GROSS AREA	PCT OF BASE	TOT ADJ AREA	SUBAREA MARKET VALUE
BAS	4,415	100	4,415	404,875
FOP	416	30	125	11,464
FOP	909	30	273	25,035
FST	110	50	55	5,044
TOTALS	5,850		4,868	446,418

MARKET ADJUSTMENTS

TYPE	MDL	EFF. AREA	TOT ADJ PTS	EFF. BASE RATE	REPL. COST NEW	AYB	EYB	ECON	FNCT		NORM	% COND
0303	04	4,868	92.4426	99.14	482,614	2008	2008	0	0	0	7.50	92.50

11 CLUB HOUSE – 0% - 0 Heated Area: 4415 HX Base Yr

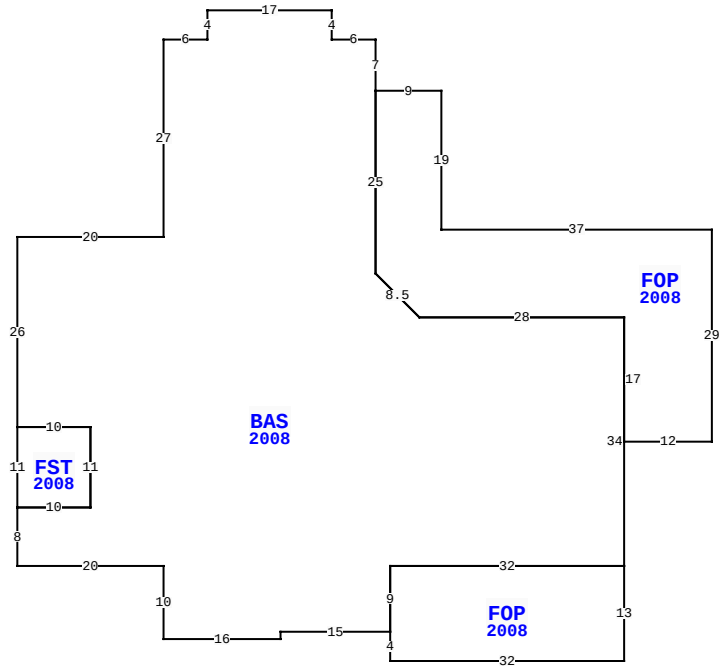

86015 COURTNEY ISLES WAY, YULEE

BLD DATE	03/03/2021	KK	LGL DATE	
XF DATE	03/03/2021	KK	LAND DATE	03/03/2021 KK
INC DATE	04/29/2024	REA	AG DATE	

NASSAU COUNTY PROPERTY

PAGE 11 of 20 4

VALUATION SUMMARY

VALUATION BY	DIRECT_CAP
Tax Group: 4	Tax Dist:
BUILDING MARKET VALUE	34,279,666
TOTAL MARKET OB/XF VALUE	0
TOTAL LAND VALUE - MARKET	0
TOTAL MARKET VALUE	37,260,507
SOH/AGL Deduction	0
ASSESSED VALUE	37,260,507
TOTAL EXEMPTION VALUE	0
BASE TAXABLE VALUE	37,260,507
TOTAL JUST VALUE	37,260,507
NCON VALUE	0
INCOME VALUE	37,260,507
PREVIOUS YEAR MKT VALUE	45,702,363

PERMIT NUM	DESCRIPTION	AMT	ISSUED
E19833	ELEC OTHER	800	08/01/2007
E19834	ELEC OTHER	800	08/01/2007
E19835	ELEC OTHER	800	08/01/2007
P12587	OTHER	0	08/01/2007
P12588	OTHER	0	08/01/2007
P12589	OTHER	0	08/01/2007

SALES DATA

OFF RECORD Number	DATE	TYPE INST	Q / U	V / I	RSN CD	SALE PRICE
2407/1161	11/10/2020	SW	Q	I	01	37,320,000
GRANTOR: RAIA FL SPE GROUP IV						
GRANTEE: CF COURTNEY ISLES L						
2056/0003	6/28/2016	SW	U	I	11	100
GRANTOR: DUDLEY JOHNNY L, DANI						
GRANTEE: COURTNEY ISLES LLC						

BUILDING NOTES

BUILDING DIMENSIONS

FOP=[YR=2008] W37N19W9BAS=[YR=2008] N7W6N4
W17S4W6S27W20S26FST=[YR=2008] S11E10
N11W10$E10S11W10S8E20S10E16N1 E15FOP=[YR=2008]
S4E32N13W32S9$N9E32 N34W28 U6 L6 N25$S25 D6 R6 E28
S17E12N29$.

EXTRA FEATURES

LN	OB/XF CODE	DESCRIPTION	BLD	CAP	L	W	UNITS	UT	Adj R	ADJ UNIT PRICE	ORIG COND	YEAR ON	YEAR ACTUAL	Q	% COND	OB/XF MKT VALUE	NOTES

LAND DESCRIPTION

TOTAL OB/XF 0

LN	USE CODE	CLS	LAND USE DESCRIPTION	CAP	RD	LOC ZONE	FRONT	DEPTH	TOT LND UTS	UNIT TYPE	DT	DPTH FACT	% COND	TOT ADJ	UNIT PRICE	ADJ UNIT PRICE	LAND VALUE	OTHER ADJUSTMENTS AND NOTES	YEAR	DENSITY	DECL	FRZ	YR	CONSRV

REVIEW DATE 03/03/2021 BY TW Total Acres: 0.00 Total Land Value: 2,980,841 Market: 0 Agricultural: 0 Common: 0 PRINTED 08/06/2024 BY SYS

PT JOHN LOWE MILL GRANTS
SEC 37-2N-27E & 51-3N-27E
IN OR 2407/1161(EX UTIL ESMT'S

CF COURTNEY ISLES LLC
C/O CF REAL EST SERVICES LLC, 710 PEACHTREE ST NE STE #100
ATLANTA, GA 30308

2024

37-2N-27-0000-0001-0260

BUILDING CHARACTERISTICS

ELEMENT	CD	CONSTRUCTION
Exterior Wall	10	ABOVE AVG 100
Roof Structur	04	WOOD TRUSS 100
Roof Cover	03	COMP SHNGL 100
Interior Wall	05	DRYWALL 100
Interior Floo	03	CONC FINSH 100
Ceiling	02	F.NOT SUS 100
Air Condition	01	NONE 100
Heating Type	01	NONE 100
Fixtures		0 100
Frame	02	WOOD FRAME 100
Story Height		9 100
RMS		16 100
Stories	1.	1. 100
Units		0 100
Occupancy	00	NONE 100
Quality	03	Quality Level 03

DOR CODE	0300	MULTI-FAMILY	
MAP NUM		MKT AREA	04
NEIGHBORHOOD/LOC	4002.00		

AREA TYPE	TOTAL GROSS AREA	PCT OF BASE	TOT ADJ AREA	SUBAREA MARKET VALUE
BAS	4,268	100	4,268	101,772
TOTALS	4,268		4,268	101,772

MARKET ADJUSTMENTS

TYPE	MDL	EFF. AREA	TOT ADJ PTS	EFF. BASE RATE	REPL. COST NEW	AYB	EYB	ECON	FNCT		NORM	% COND
0304	04	4,268	79.5057	25.64	109,432	2008	2008	0	0	0	7.00	93.00

12 APART/GAR – 0% - 0 Heated Area: 4268 HX Base Yr

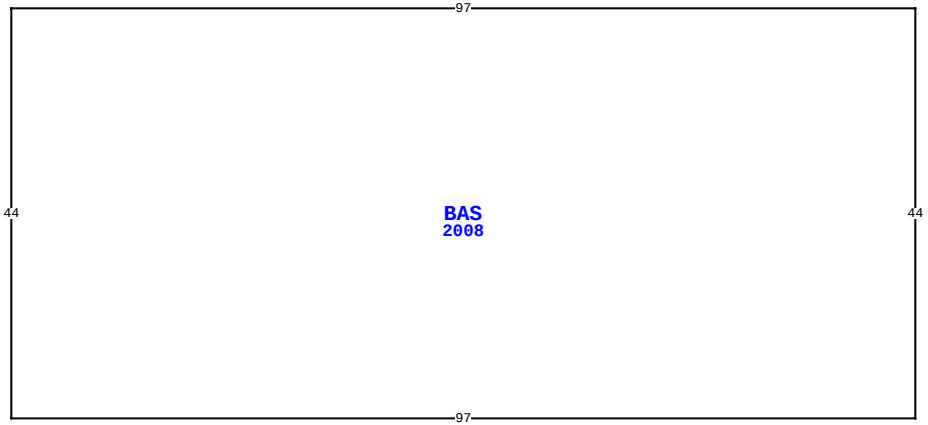

86015 COURTNEY ISLES WAY, YULEE

BLD DATE	03/03/2021	KK	LGL DATE		
XF DATE	03/03/2021	KK	LAND DATE	03/03/2021	KK
INC DATE	04/29/2024	REA	AG DATE		

NASSAU COUNTY PROPERTY

PAGE 12 of 20 4

VALUATION SUMMARY

VALUATION BY	DIRECT_CAP
Tax Group: 4	Tax Dist:
BUILDING MARKET VALUE	34,279,666
TOTAL MARKET OB/XF VALUE	0
TOTAL LAND VALUE - MARKET	0
TOTAL MARKET VALUE	37,260,507
SOH/AGL Deduction	0
ASSESSED VALUE	37,260,507
TOTAL EXEMPTION VALUE	0
BASE TAXABLE VALUE	37,260,507
TOTAL JUST VALUE	37,260,507
NCON VALUE	0
INCOME VALUE	37,260,507
PREVIOUS YEAR MKT VALUE	45,702,363

PERMIT NUM	DESCRIPTION	AMT	ISSUED
P12590	OTHER	0	08/01/2007
P12591	OTHER	0	08/01/2007
P12592	OTHER	0	08/01/2007
P12593	OTHER	0	08/01/2007
P12594	OTHER	0	08/01/2007
P12595	OTHER	0	08/01/2007

SALES DATA

OFF RECORD Number	DATE	TYPE INST	Q / U	V / I	RSN CD	SALE PRICE
2407/1161	11/10/2020	SW	Q	I	01	37,320,000
GRANTOR: RAIA FL SPE GROUP IV						
GRANTEE: CF COURTNEY ISLES L						
2056/0003	6/28/2016	SW	U	I	11	100
GRANTOR: DUDLEY JOHNNY L, DANI						
GRANTEE: COURTNEY ISLES LLC						

BUILDING NOTES

BUILDING DIMENSIONS

BAS=[YR=2008] W97S44E97N44$.

EXTRA FEATURES

L N	OB/XF CODE	DESCRIPTION	BLD	CAP	L	W	UNITS	UT	Adj R	ADJ UNIT PRICE	ORIG COND	YEAR ON	YEAR ACTUAL	Q	% COND	OB/XF MKT VALUE	NOTES

LAND DESCRIPTION

TOTAL OB/XF 0

L N	USE CODE	CLS	LAND USE DESCRIPTION	CAP	R D	LOC ZONE	FRONT	DEPTH	TOT LND UTS	UNIT TYPE	D T	DPTH FACT	% COND	TOT ADJ	UNIT PRICE	ADJ UNIT PRICE	LAND VALUE	OTHER ADJUSTMENTS AND NOTES	YEAR	DENSITY	DECL	FRZ	YR	CONSRV

REVIEW DATE 03/03/2021 BY TW Total Acres: 0.00 Total Land Value: 2,980,841 Market: 0 Agricultural: 0 Common: 0 PRINTED 08/06/2024 BY SYS

PT JOHN LOWE MILL GRANTS
SEC 37-2N-27E & 51-3N-27E
IN OR 2407/1161(EX UTIL ESMT'S

CF COURTNEY ISLES LLC
C/O CF REAL EST SERVICES LLC, 710 PEACHTREE ST NE STE #100
ATLANTA, GA 30308

2024

37-2N-27-0000-0001-0260

NASSAU COUNTY PROPERTY

BUILDING CHARACTERISTICS

ELEMENT	CD	CONSTRUCTION
Exterior Wall	10	ABOVE AVG 100
Roof Structur	04	WOOD TRUSS 100
Roof Cover	03	COMP SHNGL 100
Interior Wall	05	DRYWALL 100
Interior Floo	03	CONC FINSH 100
Ceiling	02	F.NOT SUS 100
Air Condition	01	NONE 100
Heating Type	01	NONE 100
Fixtures		0 100
Frame	02	WOOD FRAME 100
Story Height		9 100
RMS		8 100
Stories	1.	1. 100
Units		0 100
Occupancy	00	NONE 100
Quality	03	Quality Level 03

DOR CODE	0300	MULTI-FAMILY	
MAP NUM		MKT AREA	04
NEIGHBORHOOD/LOC	4002.00		

AREA TYPE	TOTAL GROSS AREA	PCT OF BASE	TOT ADJ AREA	SUBAREA MARKET VALUE
BAS	2,134	100	2,134	51,878
TOTALS	2,134		2,134	51,878

MARKET ADJUSTMENTS

TYPE	MDL	EFF. AREA	TOT ADJ PTS	EFF. BASE RATE	REPL. COST NEW	AYB	EYB	ECON	FNCT		NORM	% COND
0304	04	2,134	81.0495	26.14	55,783	2008	2008	0	0	0	7.00	93.00

13 APART/GAR – 0% - 0 Heated Area: 2134 HX Base Yr

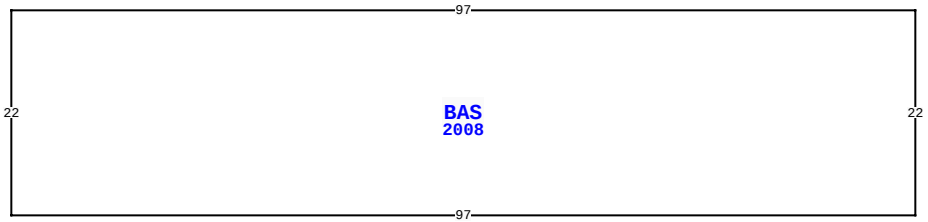

BLD DATE	03/03/2021	KK	LGL DATE
XF DATE	03/03/2021	KK	LAND DATE 03/03/2021 KK
INC DATE	04/29/2024	REA	AG DATE

86015 COURTNEY ISLES WAY, YULEE

VALUATION SUMMARY

VALUATION BY	DIRECT_CAP
Tax Group: 4	Tax Dist:
BUILDING MARKET VALUE	34,279,666
TOTAL MARKET OB/XF VALUE	0
TOTAL LAND VALUE - MARKET	0
TOTAL MARKET VALUE	37,260,507
SOH/AGL Deduction	0
ASSESSED VALUE	37,260,507
TOTAL EXEMPTION VALUE	0
BASE TAXABLE VALUE	37,260,507
TOTAL JUST VALUE	37,260,507
NCON VALUE	0
INCOME VALUE	37,260,507
PREVIOUS YEAR MKT VALUE	45,702,363

PERMIT NUM	DESCRIPTION	AMT	ISSUED
P12596	OTHER	0	08/01/2007
P12597	OTHER	0	08/01/2007
P12598	OTHER	0	08/01/2007
C20283	CO ISSUED	0	07/01/2007
C20293	CO ISSUED	0	07/01/2007
C20292	CO ISSUED	0	07/01/2007

SALES DATA

OFF RECORD Number	DATE	TYPE INST	Q U	V I	RSN CD	SALE PRICE
2407/1161	11/10/2020	SW	Q	I	01	37,320,000
GRANTOR: RAIA FL SPE GROUP IV						
GRANTEE: CF COURTNEY ISLES L						
2056/0003	6/28/2016	SW	U	I	11	100
GRANTOR: DUDLEY JOHNNY L, DANI						
GRANTEE: COURTNEY ISLES LLC						

BUILDING NOTES

BUILDING DIMENSIONS

BAS=[YR=2008] W97S22E97N22$.

EXTRA FEATURES

L N	OB/XF CODE	DESCRIPTION	BLD	CAP	L	W	UNITS	UT	Adj R	ADJ UNIT PRICE	ORIG COND	YEAR ON	YEAR ACTUAL	Q	% COND	OB/XF MKT VALUE	NOTES

LAND DESCRIPTION

TOTAL OB/XF 0

L N	USE CODE	CLS	LAND USE DESCRIPTION	CAP	R D	LOC ZONE	FRONT	DEPTH	TOT LND UTS	UNIT TYPE	D T	DPTH FACT	% COND	TOT ADJ	UNIT PRICE	ADJ UNIT PRICE	LAND VALUE	OTHER ADJUSTMENTS AND NOTES	YEAR	DENSITY	DECL	FRZ	YR	CONSRV

REVIEW DATE 03/03/2021 BY TW Total Acres: 0.00 Total Land Value: 2,980,841 Market: 0 Agricultural: 0 Common: 0 PRINTED 08/06/2024 BY SYS

PT JOHN LOWE MILL GRANTS
SEC 37-2N-27E & 51-3N-27E
IN OR 2407/1161(EX UTIL ESMT'S

CF COURTNEY ISLES LLC
C/O CF REAL EST SERVICES LLC, 710 PEACHTREE ST NE STE #100
ATLANTA, GA 30308

2024

37-2N-27-0000-0001-0260

BUILDING CHARACTERISTICS

ELEMENT	CD	CONSTRUCTION
Exterior Wall	10	ABOVE AVG 100
Roof Structur	04	WOOD TRUSS 100
Roof Cover	03	COMP SHNGL 100
Interior Wall	05	DRYWALL 100
Interior Floo	03	CONC FINSH 100
Ceiling	02	F.NOT SUS 100
Air Condition	01	NONE 100
Heating Type	01	NONE 100
Fixtures		0 100
Frame	02	WOOD FRAME 100
Story Height		9 100
RMS		5 100
Stories	1.	1. 100
Units		0 100
Occupancy	00	NONE 100
Quality	03	Quality Level 03

DOR CODE	0300	MULTI-FAMILY	
MAP NUM		MKT AREA	04
NEIGHBORHOOD/LOC	4002.00		

AREA TYPE	TOTAL GROSS AREA	PCT OF BASE	TOT ADJ AREA	SUBAREA MARKET VALUE
BAS	1,386	100	1,386	33,694
TOTALS	1,386		1,386	33,694

MARKET ADJUSTMENTS

TYPE	MDL	EFF. AREA	TOT ADJ PTS	EFF. BASE RATE	REPL. COST NEW	AYB	EYB	ECON	FNCT		NORM	% COND
0304	04	1,386	81.0495	26.14	36,230	2008	2008	0	0	0	7.00	93.00

14 APART/GAR – 0% - 0 Heated Area: 1386 HX Base Yr

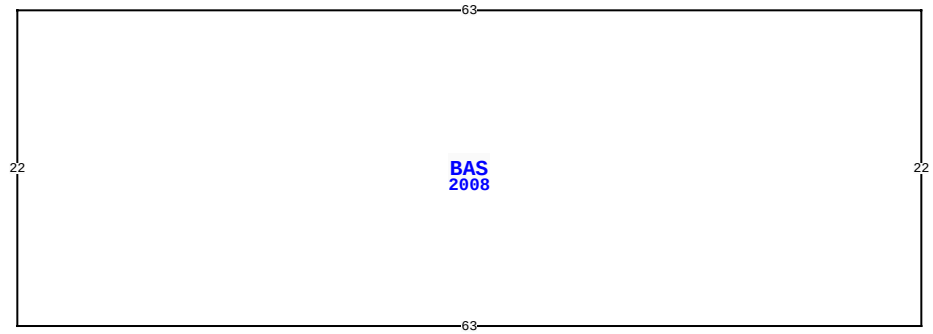

86015 COURTNEY ISLES WAY, YULEE

BLD DATE	03/03/2021	KK	LGL DATE		
XF DATE	03/03/2021	KK	LAND DATE	03/03/2021	KK
INC DATE	04/29/2024	REA	AG DATE		

NASSAU COUNTY PROPERTY

VALUATION SUMMARY

VALUATION BY	DIRECT_CAP
Tax Group: 4	Tax Dist:
BUILDING MARKET VALUE	34,279,666
TOTAL MARKET OB/XF VALUE	0
TOTAL LAND VALUE - MARKET	0
TOTAL MARKET VALUE	37,260,507
SOH/AGL Deduction	0
ASSESSED VALUE	37,260,507
TOTAL EXEMPTION VALUE	0
BASE TAXABLE VALUE	37,260,507
TOTAL JUST VALUE	37,260,507
NCON VALUE	0
INCOME VALUE	37,260,507
PREVIOUS YEAR MKT VALUE	45,702,363

PERMIT NUM	DESCRIPTION	AMT	ISSUED
B20299	NEW CONSTR	0	07/01/2007
C20275	CO ISSUED	0	07/01/2007
C20299	CO ISSUED	0	07/01/2007
C20279	CO ISSUED	0	07/01/2007
C20298	CO ISSUED	0	07/01/2007
C20281	CO ISSUED	1,340,658	07/01/2007

SALES DATA

OFF RECORD Number	DATE	TYPE INST	Q / U	V / I	RSN CD	SALE PRICE
2407/1161	11/10/2020	SW	Q	I	01	37,320,000
GRANTOR: RAIA FL SPE GROUP IV						
GRANTEE: CF COURTNEY ISLES L						
2056/0003	6/28/2016	SW	U	I	11	100
GRANTOR: DUDLEY JOHNNY L, DANI						
GRANTEE: COURTNEY ISLES LLC						

BUILDING NOTES

BUILDING DIMENSIONS

BAS=[YR=2008] W63S22E63N22$.

EXTRA FEATURES

LN	OB/XF CODE	DESCRIPTION	BLD	CAP	L	W	UNITS	UT	Adj R	ADJ UNIT PRICE	ORIG COND	YEAR ON	YEAR ACTUAL	Q	% COND	OB/XF MKT VALUE	NOTES

LAND DESCRIPTION

TOTAL OB/XF 0

LN	USE CODE	CLS	LAND USE DESCRIPTION	CAP	RD	LOC ZONE	FRONT	DEPTH	TOT LND UTS	UNIT TYPE	DT	DPTH FACT	% COND	TOT ADJ	UNIT PRICE	ADJ UNIT PRICE	LAND VALUE	OTHER ADJUSTMENTS AND NOTES	YEAR	DENSITY	DECL	FRZ	YR	CONSRV

REVIEW DATE 03/03/2021 BY TW Total Acres: 0.00 Total Land Value: 2,980,841 Market: 0 Agricultural: 0 Common: 0 PRINTED 08/06/2024 BY SYS

PT JOHN LOWE MILL GRANTS
SEC 37-2N-27E & 51-3N-27E
IN OR 2407/1161(EX UTIL ESMT'S

CF COURTNEY ISLES LLC
C/O CF REAL EST SERVICES LLC, 710 PEACHTREE ST NE STE #100
ATLANTA, GA 30308

2024

37-2N-27-0000-0001-0260

BUILDING CHARACTERISTICS

ELEMENT	CD	CONSTRUCTION
Exterior Wall	10	ABOVE AVG 100
Roof Structur	04	WOOD TRUSS 100
Roof Cover	03	COMP SHNGL 100
Interior Wall	05	DRYWALL 100
Interior Floo	03	CONC FINSH 100
Ceiling	02	F.NOT SUS 100
Air Condition	01	NONE 100
Heating Type	01	NONE 100
Fixtures		0 100
Frame	02	WOOD FRAME 100
Story Height		9 100
RMS		5 100
Stories	1.	1. 100
Units		0 100
Occupancy	00	NONE 100
Quality	03	Quality Level 03

DOR CODE	0300	MULTI-FAMILY	
MAP NUM		MKT AREA	04
NEIGHBORHOOD/LOC	4002.00		

AREA TYPE	TOTAL GROSS AREA	PCT OF BASE	TOT ADJ AREA	SUBAREA MARKET VALUE
BAS	1,386	100	1,386	33,694
TOTALS	1,386		1,386	33,694

MARKET ADJUSTMENTS

TYPE	MDL	EFF. AREA	TOT ADJ PTS	EFF. BASE RATE	REPL. COST NEW	AYB	EYB	ECON	FNCT		NORM	% COND
0304	04	1,386	81.0495	26.14	36,230	2008	2008	0	0	0	7.00	93.00

15 APART/GAR – 0% - 0 Heated Area: 1386 HX Base Yr

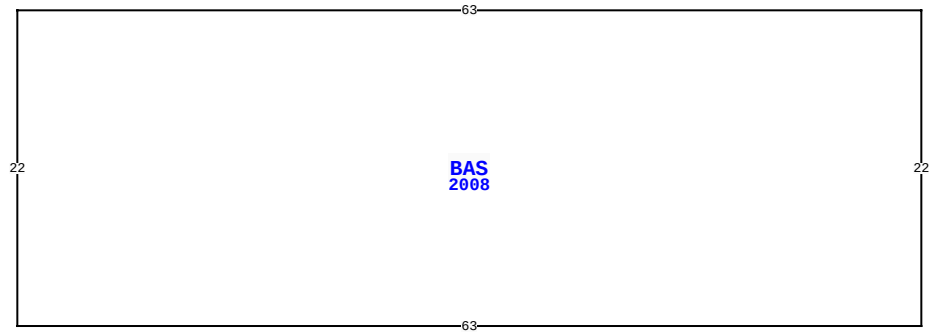

86015 COURTNEY ISLES WAY, YULEE

BLD DATE	03/03/2021	KK	LGL DATE	
XF DATE	03/03/2021	KK	LAND DATE	03/03/2021 KK
INC DATE	04/29/2024	REA	AG DATE	

NASSAU COUNTY PROPERTY

PAGE 15 of 20 4

VALUATION SUMMARY

VALUATION BY	DIRECT_CAP
Tax Group: 4	Tax Dist:
BUILDING MARKET VALUE	34,279,666
TOTAL MARKET OB/XF VALUE	0
TOTAL LAND VALUE - MARKET	0
TOTAL MARKET VALUE	37,260,507
SOH/AGL Deduction	0
ASSESSED VALUE	37,260,507
TOTAL EXEMPTION VALUE	0
BASE TAXABLE VALUE	37,260,507
TOTAL JUST VALUE	37,260,507
NCON VALUE	0
INCOME VALUE	37,260,507
PREVIOUS YEAR MKT VALUE	45,702,363

PERMIT NUM	DESCRIPTION	AMT	ISSUED
C20297	CO ISSUED	2,921,351	07/01/2007
C20273	CO ISSUED	0	07/01/2007
B20260	NEW CONSTR	185,592	07/01/2007
B20273	NEW CONSTR	407,966	07/01/2007
B20274	NEW CONSTR	412,909	07/01/2007
B20275	NEW CONSTR	1,695,251	07/01/2007

SALES DATA

OFF RECORD Number	DATE	TYPE INST	Q / U	V / I	RSN CD	SALE PRICE
2407/1161	11/10/2020	SW	Q	I	01	37,320,000
GRANTOR: RAIA FL SPE GROUP IV						
GRANTEE: CF COURTNEY ISLES L						
2056/0003	6/28/2016	SW	U	I	11	100
GRANTOR: DUDLEY JOHNNY L, DANI						
GRANTEE: COURTNEY ISLES LLC						

BUILDING NOTES

BUILDING DIMENSIONS

BAS=[YR=2008] W63S22E63N22$.

EXTRA FEATURES

LN	OB/XF CODE	DESCRIPTION	BLD	CAP	L	W	UNITS	UT	Adj R	ADJ UNIT PRICE	ORIG COND	YEAR ON	YEAR ACTUAL	Q	% COND	OB/XF MKT VALUE	NOTES

LAND DESCRIPTION

TOTAL OB/XF 0

LN	USE CODE	CLS	LAND USE DESCRIPTION	CAP	RD	LOC ZONE	FRONT	DEPTH	TOT LND UTS	UNIT TYPE	DT	DPTH FACT	% COND	TOT ADJ	UNIT PRICE	ADJ UNIT PRICE	LAND VALUE	OTHER ADJUSTMENTS AND NOTES	YEAR	DENSITY	DECL	FRZ	YR	CONSRV

REVIEW DATE 03/03/2021 BY TW Total Acres: 0.00 Total Land Value: 2,980,841 Market: 0 Agricultural: 0 Common: 0 PRINTED 08/06/2024 BY SYS

PT JOHN LOWE MILL GRANTS
SEC 37-2N-27E & 51-3N-27E
IN OR 2407/1161(EX UTIL ESMT'S

CF COURTNEY ISLES LLC
C/O CF REAL EST SERVICES LLC, 710 PEACHTREE ST NE STE #100
ATLANTA, GA 30308

2024

37-2N-27-0000-0001-0260

NASSAU COUNTY PROPERTY

BUILDING CHARACTERISTICS

ELEMENT	CD	CONSTRUCTION
Exterior Wall	10	ABOVE AVG 100
Roof Structur	04	WOOD TRUSS 100
Roof Cover	03	COMP SHNGL 100
Interior Wall	05	DRYWALL 100
Interior Floo	03	CONC FINSH 100
Ceiling	02	F.NOT SUS 100
Air Condition	01	NONE 100
Heating Type	01	NONE 100
Fixtures		0 100
Frame	02	WOOD FRAME 100
Story Height		9 100
RMS		8 100
Stories	1.	1. 100
Units		0 100
Occupancy	00	NONE 100
Quality	03	Quality Level 03

DOR CODE	0300	MULTI-FAMILY	
MAP NUM		MKT AREA	04
NEIGHBORHOOD/LOC	4002.00		

AREA TYPE	TOTAL GROSS AREA	PCT OF BASE	TOT ADJ AREA	SUBAREA MARKET VALUE
BAS	2,134	100	2,134	51,878
TOTALS	2,134		2,134	51,878

MARKET ADJUSTMENTS

TYPE	MDL	EFF. AREA	TOT ADJ PTS	EFF. BASE RATE	REPL. COST NEW	AYB	EYB	ECON	FNCT		NORM	% COND
0304	04	2,134	81.0495	26.14	55,783	2008	2008	0	0	0	7.00	93.00

16 APART/GAR – 0% - 0 Heated Area: 2134 HX Base Yr

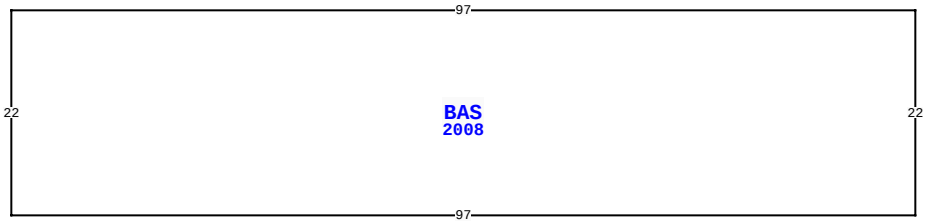

86015 COURTNEY ISLES WAY, YULEE

BLD DATE	03/03/2021	KK	LGL DATE	
XF DATE	03/03/2021	KK	LAND DATE	03/03/2021 KK
INC DATE	04/29/2024	REA	AG DATE	

VALUATION SUMMARY

VALUATION BY	DIRECT_CAP
Tax Group: 4	Tax Dist:
BUILDING MARKET VALUE	34,279,666
TOTAL MARKET OB/XF VALUE	0
TOTAL LAND VALUE - MARKET	0
TOTAL MARKET VALUE	37,260,507
SOH/AGL Deduction	0
ASSESSED VALUE	37,260,507
TOTAL EXEMPTION VALUE	0
BASE TAXABLE VALUE	37,260,507
TOTAL JUST VALUE	37,260,507
NCON VALUE	0
INCOME VALUE	37,260,507
PREVIOUS YEAR MKT VALUE	45,702,363

PERMIT NUM	DESCRIPTION	AMT	ISSUED
B20276	NEW CONSTR	53,724	07/01/2007
B20277	NEW CONSTR	1,340,658	07/01/2007
B20278	NEW CONSTR	5,000	07/01/2007
B20279	NEW CONSTR	1,340,658	07/01/2007
B20281	NEW CONSTR	1,340,658	07/01/2007
B20282	NEW CONSTR	12,000	07/01/2007

SALES DATA

OFF RECORD Number	DATE	TYPE INST	Q / U	V / I	RSN CD	SALE PRICE
2407/1161	11/10/2020	SW	Q	I	01	37,320,000
GRANTOR: RAIA FL SPE GROUP IV						
GRANTEE: CF COURTNEY ISLES L						
2056/0003	6/28/2016	SW	U	I	11	100
GRANTOR: DUDLEY JOHNNY L, DANI						
GRANTEE: COURTNEY ISLES LLC						

BUILDING NOTES

BUILDING DIMENSIONS

BAS=[YR=2008] W97S22E97N22$.

EXTRA FEATURES

L N	OB/XF CODE	DESCRIPTION	BLD	CAP	L	W	UNITS	UT	Adj R	ADJ UNIT PRICE	ORIG COND	YEAR ON	YEAR ACTUAL	Q	% COND	OB/XF MKT VALUE	NOTES

LAND DESCRIPTION

TOTAL OB/XF 0

L N	USE CODE	CLS	LAND USE DESCRIPTION	CAP	R D	LOC ZONE	FRONT	DEPTH	TOT LND UTS	UNIT TYPE	D T	DPTH FACT	% COND	TOT ADJ	UNIT PRICE	ADJ UNIT PRICE	LAND VALUE	OTHER ADJUSTMENTS AND NOTES	YEAR	DENSITY	DECL	FRZ	YR	CONSRV

REVIEW DATE 03/03/2021 BY TW Total Acres: 0.00 Total Land Value: 2,980,841 Market: 0 Agricultural: 0 Common: 0 PRINTED 08/06/2024 BY SYS

PT JOHN LOWE MILL GRANTS
SEC 37-2N-27E & 51-3N-27E
IN OR 2407/1161(EX UTIL ESMT'S

CF COURTNEY ISLES LLC
C/O CF REAL EST SERVICES LLC, 710 PEACHTREE ST NE STE #100
ATLANTA, GA 30308

2024

37-2N-27-0000-0001-0260

BUILDING CHARACTERISTICS

ELEMENT	CD	CONSTRUCTION
Exterior Wall	10	ABOVE AVG 100
Roof Structur	04	WOOD TRUSS 100
Roof Cover	03	COMP SHNGL 100
Interior Wall	05	DRYWALL 100
Interior Floo	03	CONC FINSH 100
Ceiling	02	F.NOT SUS 100
Air Condition	01	NONE 100
Heating Type	01	NONE 100
Fixtures		0 100
Frame	02	WOOD FRAME 100
Story Height		9 100
RMS		8 100
Stories	1.	1. 100
Units		0 100
Occupancy	00	NONE 100
Quality	03	Quality Level 03

DOR CODE	0300	MULTI-FAMILY	
MAP NUM		MKT AREA	04
NEIGHBORHOOD/LOC	4002.00		

AREA TYPE	TOTAL GROSS AREA	PCT OF BASE	TOT ADJ AREA	SUBAREA MARKET VALUE
BAS	2,134	100	2,134	51,878
TOTALS	2,134		2,134	51,878

MARKET ADJUSTMENTS

TYPE	MDL	EFF. AREA	TOT ADJ PTS	EFF. BASE RATE	REPL. COST NEW	AYB	EYB	ECON	FNCT		NORM	% COND
0304	04	2,134	81.0495	26.14	55,783	2008	2008	0	0	0	7.00	93.00

17 APART/GAR – 0% - 0 Heated Area: 2134 HX Base Yr

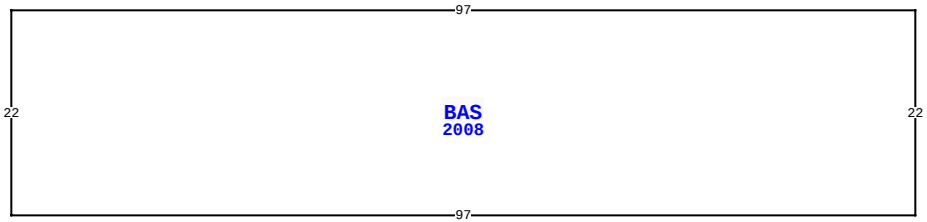

86015 COURTNEY ISLES WAY, YULEE

BLD DATE	03/03/2021	KK	LGL DATE	
XF DATE	03/03/2021	KK	LAND DATE	03/03/2021 KK
INC DATE	04/29/2024	REA	AG DATE	

NASSAU COUNTY PROPERTY

PAGE 17 of 20 4

VALUATION SUMMARY

VALUATION BY	DIRECT_CAP
Tax Group: 4	Tax Dist:
BUILDING MARKET VALUE	34,279,666
TOTAL MARKET OB/XF VALUE	0
TOTAL LAND VALUE - MARKET	0
TOTAL MARKET VALUE	37,260,507
SOH/AGL Deduction	0
ASSESSED VALUE	37,260,507
TOTAL EXEMPTION VALUE	0
BASE TAXABLE VALUE	37,260,507
TOTAL JUST VALUE	37,260,507
NCON VALUE	0
INCOME VALUE	37,260,507
PREVIOUS YEAR MKT VALUE	45,702,363

PERMIT NUM	DESCRIPTION	AMT	ISSUED
B20283	NEW CONSTR	1,340,658	07/01/2007
B20284	NEW CONSTR	2,000	07/01/2007
B20285	NEW CONSTR	69,696	07/01/2007
B20286	NEW CONSTR	69,696	07/01/2007
B20287	NEW CONSTR	69,696	07/01/2007
B20288	NEW CONSTR	45,738	07/01/2007

SALES DATA

OFF RECORD Number	DATE	TYPE INST	Q / U	V / I	RSN CD	SALE PRICE
2407/1161	11/10/2020	SW	Q	I	01	37,320,000
GRANTOR: RAIA FL SPE GROUP IV						
GRANTEE: CF COURTNEY ISLES L						
2056/0003	6/28/2016	SW	U	I	11	100
GRANTOR: DUDLEY JOHNNY L, DANI						
GRANTEE: COURTNEY ISLES LLC						

BUILDING NOTES

BUILDING DIMENSIONS

BAS=[YR=2008] W97S22E97N22$.

EXTRA FEATURES

L N	OB/XF CODE	DESCRIPTION	BLD	CAP	L	W	UNITS	UT	Adj R	ADJ UNIT PRICE	ORIG COND	YEAR ON	YEAR ACTUAL	Q	% COND	OB/XF MKT VALUE	NOTES

LAND DESCRIPTION

TOTAL OB/XF 0

L N	USE CODE	CLS	LAND USE DESCRIPTION	CAP	R D	LOC ZONE	FRONT	DEPTH	TOT LND UTS	UNIT TYPE	D T	DPTH FACT	% COND	TOT ADJ	UNIT PRICE	ADJ UNIT PRICE	LAND VALUE	OTHER ADJUSTMENTS AND NOTES	YEAR	DENSITY	DECL	FRZ	YR	CONSRV

REVIEW DATE 03/03/2021 BY TW Total Acres: 0.00 Total Land Value: 2,980,841 Market: 0 Agricultural: 0 Common: 0 PRINTED 08/06/2024 BY SYS

PT JOHN LOWE MILL GRANTS
SEC 37-2N-27E & 51-3N-27E
IN OR 2407/1161(EX UTIL ESMT'S

CF COURTNEY ISLES LLC
C/O CF REAL EST SERVICES LLC, 710 PEACHTREE ST NE STE #100
ATLANTA, GA 30308

2024

37-2N-27-0000-0001-0260

NASSAU COUNTY PROPERTY

BUILDING CHARACTERISTICS

ELEMENT	CD	CONSTRUCTION
Exterior Wall	10	ABOVE AVG 100
Roof Structur	04	WOOD TRUSS 100
Roof Cover	03	COMP SHNGL 100
Interior Wall	05	DRYWALL 100
Interior Floo	03	CONC FINSH 100
Ceiling	02	F.NOT SUS 100
Air Condition	01	NONE 100
Heating Type	01	NONE 100
Fixtures		0 100
Frame	02	WOOD FRAME 100
Story Height		9 100
RMS		8 100
Stories	1.	1. 100
Units		0 100
Occupancy	00	NONE 100
Quality	03	Quality Level 03

DOR CODE	0300	MULTI-FAMILY	
MAP NUM		MKT AREA	04
NEIGHBORHOOD/LOC	4002.00		

AREA TYPE	TOTAL GROSS AREA	PCT OF BASE	TOT ADJ AREA	SUBAREA MARKET VALUE
BAS	2,134	100	2,134	51,878
TOTALS	2,134		2,134	51,878

MARKET ADJUSTMENTS

TYPE	MDL	EFF. AREA	TOT ADJ PTS	EFF. BASE RATE	REPL. COST NEW	AYB	EYB	ECON	FNCT		NORM	% COND
0304	04	2,134	81.0495	26.14	55,783	2008	2008	0	0	0	7.00	93.00

18 APART/GAR – 0% - 0 Heated Area: 2134 HX Base Yr

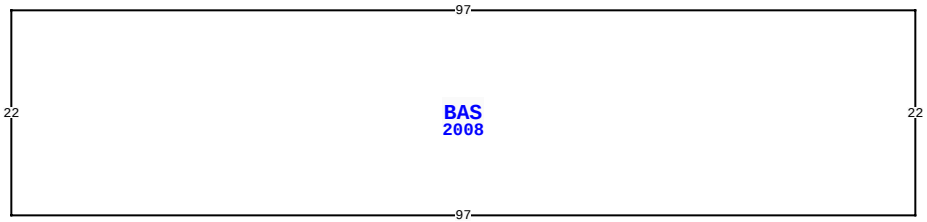

86015 COURTNEY ISLES WAY, YULEE

BLD DATE	03/03/2021	KK	LGL DATE	
XF DATE	03/03/2021	KK	LAND DATE	03/03/2021 KK
INC DATE	04/29/2024	REA	AG DATE	

VALUATION SUMMARY

VALUATION BY	DIRECT_CAP
Tax Group: 4	Tax Dist:
BUILDING MARKET VALUE	34,279,666
TOTAL MARKET OB/XF VALUE	0
TOTAL LAND VALUE - MARKET	0
TOTAL MARKET VALUE	37,260,507
SOH/AGL Deduction	0
ASSESSED VALUE	37,260,507
TOTAL EXEMPTION VALUE	0
BASE TAXABLE VALUE	37,260,507
TOTAL JUST VALUE	37,260,507
NCON VALUE	0
INCOME VALUE	37,260,507
PREVIOUS YEAR MKT VALUE	45,702,363

PERMIT NUM	DESCRIPTION	AMT	ISSUED
B20289	NEW CONSTR	45,738	07/01/2007
B20290	NEW CONSTR	69,696	07/01/2007
B20291	NEW CONSTR	139,392	07/01/2007
B20292	NEW CONSTR	13,200	07/01/2007
B20293	NEW CONSTR	1,370,975	07/01/2007
B20294	NEW CONSTR	5,000	07/01/2007

SALES DATA

OFF RECORD Number	DATE	TYPE INST	Q / U	V / I	RSN CD	SALE PRICE
2407/1161	11/10/2020	SW	Q	I	01	37,320,000
GRANTOR: RAIA FL SPE GROUP IV						
GRANTEE: CF COURTNEY ISLES L						
2056/0003	6/28/2016	SW	U	I	11	100
GRANTOR: DUDLEY JOHNNY L, DANI						
GRANTEE: COURTNEY ISLES LLC						

BUILDING NOTES

BUILDING DIMENSIONS

BAS=[YR=2008] W97S22E97N22$.

EXTRA FEATURES

LN	OB/XF CODE	DESCRIPTION	BLD	CAP	L	W	UNITS	UT	Adj R	ADJ UNIT PRICE	ORIG COND	YEAR ON	YEAR ACTUAL	Q	% COND	OB/XF MKT VALUE	NOTES

LAND DESCRIPTION

TOTAL OB/XF 0

LN	USE CODE	CLS	LAND USE DESCRIPTION	CAP	RD	LOC ZONE	FRONT	DEPTH	TOT LND UTS	UNIT TYPE	DT	DPTH FACT	% COND	TOT ADJ	UNIT PRICE	ADJ UNIT PRICE	LAND VALUE	OTHER ADJUSTMENTS AND NOTES	YEAR	DENSITY	DECL	FRZ	YR	CONSRV

REVIEW DATE 03/03/2021 BY TW Total Acres: 0.00 Total Land Value: 2,980,841 Market: 0 Agricultural: 0 Common: 0 PRINTED 08/06/2024 BY SYS

PT JOHN LOWE MILL GRANTS
SEC 37-2N-27E & 51-3N-27E
IN OR 2407/1161(EX UTIL ESMT'S

CF COURTNEY ISLES LLC
C/O CF REAL EST SERVICES LLC, 710 PEACHTREE ST NE STE #100
ATLANTA, GA 30308

2024

37-2N-27-0000-0001-0260

NASSAU COUNTY PROPERTY

BUILDING CHARACTERISTICS

ELEMENT	CD	CONSTRUCTION
Exterior Wall	10	ABOVE AVG 100
Roof Structur	04	WOOD TRUSS 100
Roof Cover	03	COMP SHNGL 100
Interior Wall	05	DRYWALL 100
Interior Floo	03	CONC FINSH 100
Ceiling	02	F.NOT SUS 100
Air Condition	01	NONE 100
Heating Type	01	NONE 100
Fixtures		0 100
Frame	02	WOOD FRAME 100
Story Height		9 100
RMS		6 100
Stories	1.	1. 100
Units		0 100
Occupancy	00	NONE 100
Quality	03	Quality Level 03

DOR CODE	0300	MULTI-FAMILY	
MAP NUM		MKT AREA	04
NEIGHBORHOOD/LOC	4002.00		

AREA TYPE	TOTAL GROSS AREA	PCT OF BASE	TOT ADJ AREA	SUBAREA MARKET VALUE
BAS	1,650	100	1,650	40,112
TOTALS	1,650		1,650	40,112

MARKET ADJUSTMENTS

TYPE	MDL	EFF. AREA	TOT ADJ PTS	EFF. BASE RATE	REPL. COST NEW	AYB	EYB	ECON	FNCT		NORM	% COND
0304	04	1,650	81.0495	26.14	43,131	2008	2008	0	0	0	7.00	93.00

19 APART/GAR – 0% - 0 Heated Area: 1650 HX Base Yr

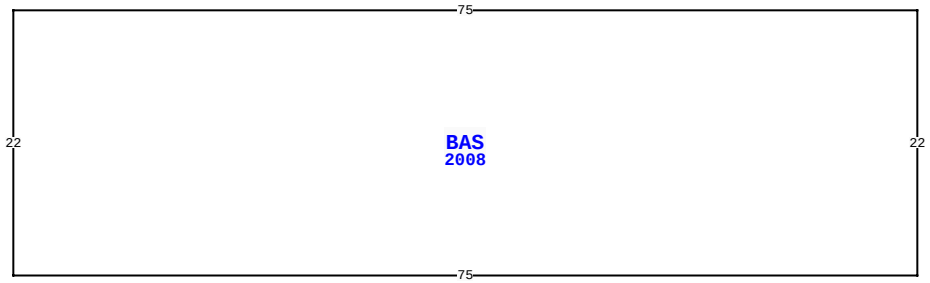

86015 COURTNEY ISLES WAY, YULEE

BLD DATE	03/03/2021	KK	LGL DATE	
XF DATE	03/03/2021	KK	LAND DATE	03/03/2021 KK
INC DATE	04/29/2024	REA	AG DATE	

VALUATION SUMMARY

VALUATION BY	DIRECT_CAP
Tax Group: 4	Tax Dist:
BUILDING MARKET VALUE	34,279,666
TOTAL MARKET OB/XF VALUE	0
TOTAL LAND VALUE - MARKET	0
TOTAL MARKET VALUE	37,260,507
SOH/AGL Deduction	0
ASSESSED VALUE	37,260,507
TOTAL EXEMPTION VALUE	0
BASE TAXABLE VALUE	37,260,507
TOTAL JUST VALUE	37,260,507
NCON VALUE	0
INCOME VALUE	37,260,507
PREVIOUS YEAR MKT VALUE	45,702,363

PERMIT NUM	DESCRIPTION	AMT	ISSUED
B20295	NEW CONSTR	5,000	07/01/2007
B20296	NEW CONSTR	5,000	07/01/2007
B20297	NEW CONSTR	2,921,351	07/01/2007
B20298	NEW CONSTR	2,921,351	07/01/2007
E19321	ELEC OTHER	0	05/01/2007

SALES DATA

OFF RECORD Number	DATE	TYPE INST	Q / U	V / I	RSN CD	SALE PRICE
2407/1161	11/10/2020	SW	Q	I	01	37,320,000
GRANTOR: RAIA FL SPE GROUP IV						
GRANTEE: CF COURTNEY ISLES L						
2056/0003	6/28/2016	SW	U	I	11	100
GRANTOR: DUDLEY JOHNNY L, DANI						
GRANTEE: COURTNEY ISLES LLC						

BUILDING NOTES

BUILDING DIMENSIONS

BAS=[YR=2008] W75S22E75N22$.

EXTRA FEATURES

L N	OB/XF CODE	DESCRIPTION	BLD	CAP	L	W	UNITS	UT	Adj R	ADJ UNIT PRICE	ORIG COND	YEAR ON	YEAR ACTUAL	Q	% COND	OB/XF MKT VALUE	NOTES

LAND DESCRIPTION

TOTAL OB/XF 0

L N	USE CODE	CLS	LAND USE DESCRIPTION	CAP	R D	LOC ZONE	FRONT	DEPTH	TOT LND UTS	UNIT TYPE	D T	DPTH FACT	% COND	TOT ADJ	UNIT PRICE	ADJ UNIT PRICE	LAND VALUE	OTHER ADJUSTMENTS AND NOTES	YEAR	DENSITY	DECL	FRZ	YR	CONSRV

REVIEW DATE 03/03/2021 BY TW Total Acres: 0.00 Total Land Value: 2,980,841 Market: 0 Agricultural: 0 Common: 0 PRINTED 08/06/2024 BY SYS

PT JOHN LOWE MILL GRANTS
SEC 37-2N-27E & 51-3N-27E
IN OR 2407/1161(EX UTIL ESMT'S

CF COURTNEY ISLES LLC
C/O CF REAL EST SERVICES LLC, 710 PEACHTREE ST NE STE #100
ATLANTA, GA 30308

2024

37-2N-27-0000-0001-0260

NASSAU COUNTY PROPERTY

BUILDING CHARACTERISTICS

ELEMENT	CD	CONSTRUCTION
Exterior Wall	10	ABOVE AVG 100
Roof Structur	04	WOOD TRUSS 100
Roof Cover	03	COMP SHNGL 100
Interior Wall	05	DRYWALL 100
Interior Floo	03	CONC FINSH 100
Ceiling	02	F.NOT SUS 100
Air Condition	01	NONE 100
Heating Type	01	NONE 100
Fixtures		1 100
Frame	02	WOOD FRAME 100
Story Height		9 100
RMS		1 100
Stories	1.	1. 100
Units		0 100
Occupancy	00	NONE 100
Quality	03	Quality Level 03

DOR CODE	0300	MULTI-FAMILY	
MAP NUM		MKT AREA	04
NEIGHBORHOOD/LOC	4002.00		

AREA TYPE	TOTAL GROSS AREA	PCT OF BASE	TOT ADJ AREA	SUBAREA MARKET VALUE
BAS	400	100	400	10,427
TOTALS	400		400	10,427

MARKET ADJUSTMENTS

TYPE	MDL	EFF. AREA	TOT ADJ PTS	EFF. BASE RATE	REPL. COST NEW	AYB	EYB	ECON	FNCT		NORM	% COND
0304	04	400	86.9085	28.03	11,212	2008	2008	0	0	0	7.00	93.00

20 APART/GAR – 0% - 0 Heated Area: 400 HX Base Yr

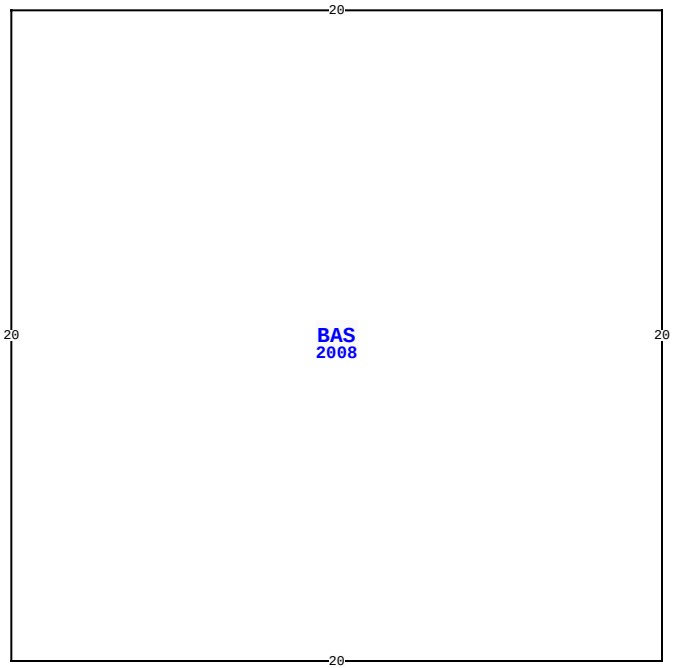

86015 COURTNEY ISLES WAY, YULEE

BLD DATE	03/03/2021	KK	LGL DATE	
XF DATE	03/03/2021	KK	LAND DATE	03/03/2021 KK
INC DATE	04/29/2024	REA	AG DATE	

NASSAU COUNTY PROPERTY VALUATION SUMMARY

VALUATION BY	DIRECT_CAP
Tax Group: 4	Tax Dist:
BUILDING MARKET VALUE	34,279,666
TOTAL MARKET OB/XF VALUE	0
TOTAL LAND VALUE - MARKET	0
TOTAL MARKET VALUE	37,260,507
SOH/AGL Deduction	0
ASSESSED VALUE	37,260,507
TOTAL EXEMPTION VALUE	0
BASE TAXABLE VALUE	37,260,507
TOTAL JUST VALUE	37,260,507
NCON VALUE	0
INCOME VALUE	37,260,507
PREVIOUS YEAR MKT VALUE	45,702,363

PERMIT NUM	DESCRIPTION	AMT	ISSUED

SALES DATA

OFF RECORD Number	DATE	TYPE INST	Q U /	V I /	RSN CD	SALE PRICE
2407/1161	11/10/2020	SW	Q	I	01	37,320,000
GRANTOR: RAIA FL SPE GROUP IV						
GRANTEE: CF COURTNEY ISLES L						
2056/0003	6/28/2016	SW	U	I	11	100
GRANTOR: DUDLEY JOHNNY L, DANI						
GRANTEE: COURTNEY ISLES LLC						

BUILDING NOTES

BUILDING DIMENSIONS

BAS=[YR=2008] W20S20E20N20$.

EXTRA FEATURES

L N	OB/XF CODE	DESCRIPTION	BLD	CAP	L	W	UNITS	UT	Adj R	ADJ UNIT PRICE	ORIG COND	YEAR ON	YEAR ACTUAL	Q	% COND	OB/XF MKT VALUE	NOTES

LAND DESCRIPTION

TOTAL OB/XF 0

L N	USE CODE	CLS	LAND USE DESCRIPTION	CAP	R D	LOC ZONE	FRONT	DEPTH	TOT LND UTS	UNIT TYPE	D T	DPTH FACT	% COND	TOT ADJ	UNIT PRICE	ADJ UNIT PRICE	LAND VALUE	OTHER ADJUSTMENTS AND NOTES	YEAR	DENSITY	DECL	FRZ	YR	CONSRV

REVIEW DATE 03/03/2021 BY TW Total Acres: 0.00 Total Land Value: 2,980,841 Market: 0 Agricultural: 0 Common: 0 PRINTED 08/06/2024 BY SYS