BLOCK 4 LOT 14
SHEFFIELD VILLAGE PB 5/28 & 29

POLLETT TAYLOR M
54284 DORNBUSH RD
CALLAHAN, FL 32011

2024

37-1N-25-299S-0004-0140

NASSAU COUNTY PROPERTY

BUILDING CHARACTERISTICS

ELEMENT	CD	CONSTRUCTION
Exterior Wall	20	FACE BRICK 100
Roof Structur	03	GABLE/HIP 100
Roof Cover	03	COMP SHNGL 100
Interior Wall	05	DRYWALL 100
Interior Floo	08	SHT VINYL 100
Air Condition	03	CENTRAL 100
Heating Type	04	AIR DUCTED 100
Bedrooms		3 100
Bathrooms		2 100
Frame	02	WOOD FRAME 100
Stories	1.	1. 100
Units		0 100
Occupancy	00	NONE 100
Quality	06	Quality Level 06
DOR CODE	0100	SINGLE FAMILY
MAP NUM		MKT AREA 08
NEIGHBORHOOD/LOC	8026.00	

AREA TYPE	TOTAL GROSS AREA	PCT OF BASE	TOT ADJ AREA	SUBAREA MARKET VALUE
BAS	1,862	100	1,862	274,786
FGR	625	55	344	50,766
FOP	84	30	25	3,690
FOP	160	30	48	7,084
STP	4	10	0	0
STP	8	10	1	147
TOTALS	2,743		2,280	336,473

MARKET ADJUSTMENTS

TYPE	MDL	EFF. AREA	TOT ADJ PTS	EFF. BASE RATE	REPL. COST NEW	AYB	EYB	ECON	FNCT		NORM	% COND
0900	01	2,280	121.7160	152.14	346,879	2019	2019	0	0	0	3.00	97.00

2 SNGL FAM – 0% - 0 Heated Area: 1862 HX Base Yr

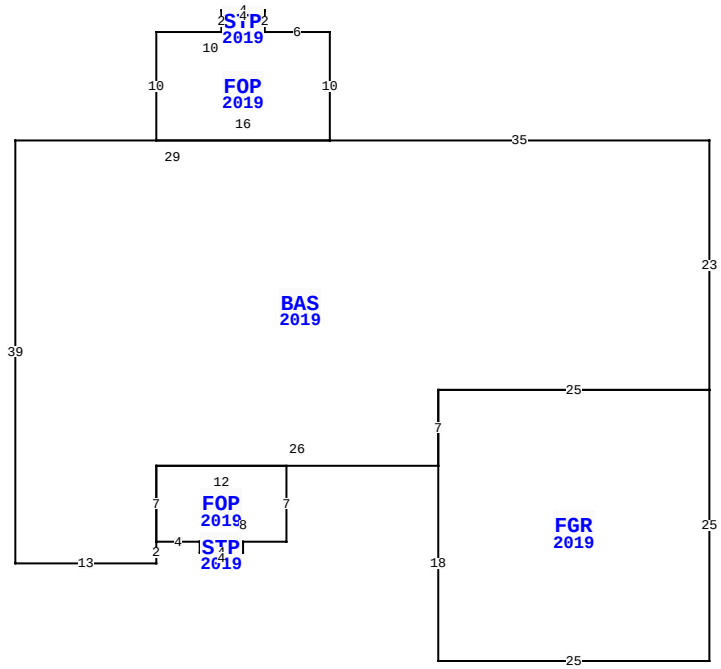

54284 DORNBUSH RD, CALLAHAN

BLD DATE		LGL DATE	
XF DATE		LAND DATE	
INC DATE		AG DATE	

VALUATION SUMMARY

VALUATION BY	STANDARD
Tax Group: 6	Tax Dist:
BUILDING MARKET VALUE	336,473
TOTAL MARKET OB/XF VALUE	9,732
TOTAL LAND VALUE - MARKET	45,000
TOTAL MARKET VALUE	391,205
SOH/AGL Deduction	48,371
ASSESSED VALUE	342,834
TOTAL EXEMPTION VALUE	0
BASE TAXABLE VALUE	342,834
TOTAL JUST VALUE	391,205
NCON VALUE	0
INCOME VALUE	
PREVIOUS YEAR MKT VALUE	376,967

PERMIT NUM	DESCRIPTION	AMT	ISSUED
19010548	CO ISSUED	0	10/07/2019
1900961	NEW CONSTR	253,923	02/01/2019
MH003090	MH MOVE-ON	0	05/01/2000

SALES DATA

OFF RECORD Number	DATE	TYPE INST	Q U /	V I /	RSN CD	SALE PRICE
2319/0997	11/12/2019	WD	Q	I	01	292,500
GRANTOR: SCAFF AUDREY & BETTY						
GRANTEE: POLLETT TAYLOR M						
2127/1436	6/15/2017	WD	Q	I	01	35,000
GRANTOR: DAVIES ROBERT A						
GRANTEE: SCAFF AUDREY & BETT						

BUILDING NOTES

BUILDING DIMENSIONS

BAS=[YR=2019] W35 FOP=[YR=2019] N10 W6 STP=[YR=2019] N2 W4 S2 E4$ W10 S10 E16$ W29 S39 E13 N2 FOP=[YR=2019] E4 STP=[YR=2019] S1 E4 N1 W4$ E8 N7 W12 S7$ N7 E26 FGR=[YR=2019] S18 E25 N25 W25 S7$ N7 E25 N23$.

EXTRA FEATURES

LN	OB/XF CODE	DESCRIPTION	BLD	CAP	L	W	UNITS	UT	Adj R	ADJ UNIT PRICE	ORIG COND	YEAR ON	YEAR ACTUAL	Q	% COND	OB/XF MKT VALUE	NOTES
1	0812	CONCRETE C	0	0	0	0	2,416.00	SF	4.00	4.00	100	2019	2019	3	98	9,471	
2	1127	BRICK 8"	0	0	0	0	24.00	SF	11.00	11.00	100	2019	2019	3	99	261	

LAND DESCRIPTION

TOTAL OB/XF 9,732

LN	USE CODE	CLS	LAND USE DESCRIPTION	CAP	RD	LOC ZONE	FRONT	DEPTH	TOT LND UTS	UNIT TYPE	DT	DPTH FACT	% COND	TOT ADJ	UNIT PRICE	ADJ UNIT PRICE	LAND VALUE	OTHER ADJUSTMENTS AND NOTES	YEAR	DENSITY	DECL	FRZ	YR	CONSRV
1	000100	C	SFR	0		OR	0.00	0.00	1.00	LT		1.00	1.00	1.00	45,000.00	45,000.00	45,000							

REVIEW DATE 10/14/2019 BY KB Total Acres: 0.00 Total Land Value: 45,000 Market: 0 Agricultural: 0 Common: 45,000 PRINTED 08/06/2024 BY SYS