BLOCK 3 LOT 2
IN OR 2531/720
SHEFFIELD VILLAGE PB 5/28 & 29

DAVIS ANDREW & HEATHER
54768 DORNBUSH ROAD
CALLAHAN, FL 32011

2024

37-1N-25-299S-0003-0020

BUILDING CHARACTERISTICS

ELEMENT	CD	CONSTRUCTION
Exterior Wall	30	VINYL 100
Roof Structur	03	GABLE/HIP 100
Roof Cover	12	MODULAR MT 100
Interior Wall	05	DRYWALL 100
Interior Floo	11	CLAY TILE 60
Interior Floo	14	CARPET 40
Air Condition	03	CENTRAL 100
Heating Type	03	FORCED AIR 100
Bedrooms		5 100
Bathrooms		2.5 100
Frame	02	WOOD FRAME 100
Stories	2.	2. 100
Units		1 100
BUD8 Adjustme	06	DIST 1D 100
Occupancy	00	NONE 100
Quality	06	Quality Level 06
DOR CODE	0200	MOBILE HOME
MAP NUM		MKT AREA 08
NEIGHBORHOOD/LOC	8026.00	

AREA TYPE	TOTAL GROSS AREA	PCT OF BASE	TOT ADJ AREA	SUBAREA MARKET VALUE
BAS	1,320	100	1,320	118,076
BAS	103	100	103	9,214
BAS	965	100	965	86,321
DCK	112	10	11	985
DCK	733	10	73	6,530
FOP	205	30	62	5,546
FUS	895	100	895	80,059
TOTALS	4,333		3,429	306,731

MARKET ADJUSTMENTS

TYPE	MDL	EFF. AREA	TOT ADJ PTS	EFF. BASE RATE	REPL. COST NEW	AYB	EYB	ECON	FNCT	PD	NORM	% COND
0110	01	3,429	116.1684	81.32	278,846	1984	2015	0	0	110	3.50	110.00

1 MH/SFR – 0% - 2023 Heated Area: 3283 HX Base Yr

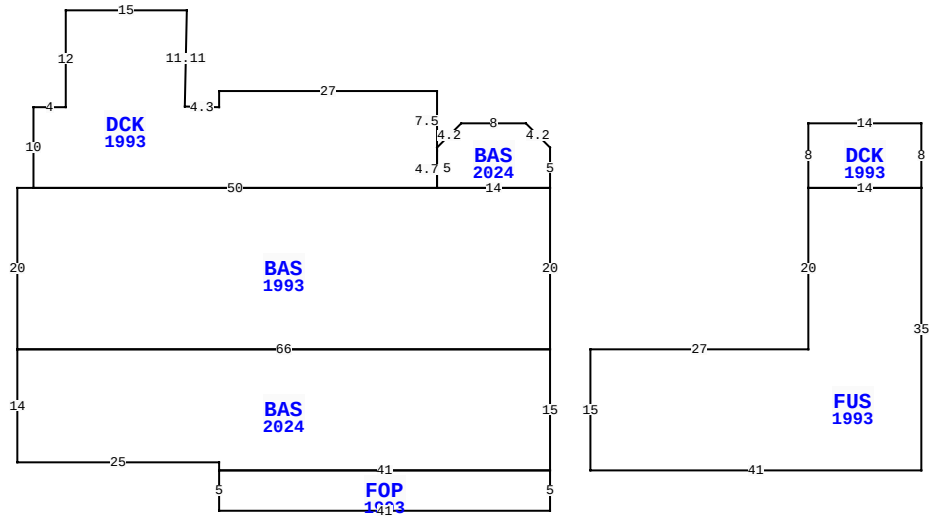

54768 DORNBUSH RD, CALLAHAN

BLD DATE		LGL DATE	
XF DATE		LAND DATE	
INC DATE		AG DATE	

NASSAU COUNTY PROPERTY

PAGE 1 of 1 6

VALUATION SUMMARY

VALUATION BY	STANDARD
Tax Group: 6	Tax Dist:
BUILDING MARKET VALUE	306,731
TOTAL MARKET OB/XF VALUE	13,750
TOTAL LAND VALUE - MARKET	45,000
TOTAL MARKET VALUE	365,481
SOH/AGL Deduction	25,203
ASSESSED VALUE	340,278
TOTAL EXEMPTION VALUE	0
BASE TAXABLE VALUE	340,278
TOTAL JUST VALUE	365,481
NCON VALUE	0
INCOME VALUE	
PREVIOUS YEAR MKT VALUE	309,344

BLDG:1:4: 1984 CLAS (1992)
BLDG:1:3: RP: 433846
BLDG:1:1: SW/MH/ID C197094

PERMIT NUM	DESCRIPTION	AMT	ISSUED
R2304732	MODULAR ROOF	18,000	04/12/2023
17004629	REPAIR/RRF	13,000	07/01/2017
4095	H/AC	3,000	02/12/1992
3877	H/AC	2,500	07/26/1991

SALES DATA

OFF RECORD Number	DATE	TYPE INST	Q U	V I	RSN CD	SALE PRICE
2531/0720	1/11/2022	WD	Q	I	01	415,000
GRANTOR: GARRIDO YANSEL & YADI						
GRANTEE: DAVIS ANDREW & HEAT						
2190/0821	4/11/2018	WD	Q	I	01	230,000
GRANTOR: HAMBY PHYLLIS & JERRY						
GRANTEE: GARRIDO YANSEL & YA						

BUILDING NOTES

BUILDING DIMENSIONS

BAS=[YR=1993;ORIG=0,5] W14 W50 W2 S20 E66 N20 $
BAS=[YR=2024;ORIG=-66,25] E66 S15 W41 N1 W25 N14 $
FUS=[YR=1993;ORIG=5,25] E27 N20 E14 S35 W41 N15 $
DCK=[YR=1993;ORIG=-14,-7] W27 S2 U0.1L4.3 U11.11R0.3 W15 S12 W4 S10 E50 N4.7 N7.5 $
FOP=[YR=1993;ORIG=-41,40] S5 E41 N5 W41 $
DCK=[YR=1993;ORIG=32,5] N8 E14 S8 W14 $
BAS=[YR=2024;ORIG=-14,0] U3R3 E8 D3R3 S5 W14 N5 $
.

EXTRA FEATURES

LN	OB/XF CODE	DESCRIPTION	BLD	CAP	L	W	UNITS	UT	Adj R	ADJ UNIT PRICE	ORIG COND	YEAR ON	YEAR ACTUAL	Q	% COND	OB/XF MKT VALUE	NOTES
1	0510	GARAGE WD-	0	0	25	25	625.00	SF	35.00	35.00	100	1989	1989	3	20	4,375	
2	0681	POLE SHED	0	0	25	6	150.00	SF	15.00	15.00	100	1989	1989	3	20	450	
3	0681	POLE SHED	0	0	31	6	186.00	SF	15.00	15.00	100	1989	1989	3	20	558	
4	0504	FP-ELECTRI	0	0	0	0	1.00	UT	2,000.00	2,000.00	100	1991	1991	3	70	1,400	
5	0812	CONCRETE C	0	0	0	0	2,137.00	SF	3.40	3.40	100	1992	1992	3	64	4,650	
7	0350	CARPORT WD	0	0	36	24	864.00	SF	11.05	11.05	100	2000	2000	3	20	1,909	
8	0751	UOP	0	0	10	10	100.00	SF	8.50	8.50	100	2007	2007	3	48	408	

LAND DESCRIPTION

TOTAL OB/XF 13,750

LN	USE CODE	CLS	LAND USE DESCRIPTION	CAP	RD	LOC ZONE	FRONT	DEPTH	TOT LND UTS	UNIT TYPE	DT	DPTH FACT	% COND	TOT ADJ	UNIT PRICE	ADJ UNIT PRICE	LAND VALUE	OTHER ADJUSTMENTS AND NOTES	YEAR	DENSITY	DECL	FRZ	YR	CONSRV
1	000100	C	SFR	0		OR	0.00	0.00	1.00	LT		1.00	1.00	1.00	45,000.00	45,000.00	45,000							

REVIEW DATE 01/06/2023 BY KWA Total Acres: 0.00 Total Land Value: 45,000 Market: 0 Agricultural: 0 Common: 45,000 PRINTED 08/06/2024 BY SYS