TRACT 63
NASSAU VILLAGE WEST PB 5/23

EDDY SHARON E
540591 LEM TURNER RD
CALLAHAN, FL 32011

2024

37-1N-25-299F-0063-0000

BUILDING CHARACTERISTICS

ELEMENT	CD	CONSTRUCTION
Exterior Wall	05	AVERAGE 90
Exterior Wall	15	CONC BLOCK 10
Roof Structur	03	GABLE/HIP 100
Roof Cover	12	MODULAR MT 100
Interior Wall	05	DRYWALL 70
Interior Wall	04	PLYWOOD 30
Interior Floo	14	CARPET 80
Interior Floo	08	SHT VINYL 20
Air Condition	03	CENTRAL 100
Heating Type	04	AIR DUCTED 100
Bedrooms		3 100
Bathrooms		2 100
Frame	02	WOOD FRAME 100
Stories	1.	1. 100
Units		1 100
BUD8 Adjustme	06	DIST 1D 100
Quality	03	Quality Level 03
DOR CODE	0200	MOBILE HOME
MAP NUM		MKT AREA 08
NEIGHBORHOOD/LOC	8026.00	

AREA TYPE	TOTAL GROSS AREA	PCT OF BASE	TOT ADJ AREA	SUBAREA MARKET VALUE
BAS	1,345	100	1,345	75,106
BAS	264	100	264	14,742
BAS	600	100	600	33,504
FSP	336	40	134	7,483
FST	120	55	66	3,686
UOP	240	20	48	2,680
UOP	241	20	48	2,680
TOTALS	3,146		2,505	139,881

MARKET ADJUSTMENTS

TYPE	MDL	EFF. AREA	TOT ADJ PTS	EFF. BASE RATE	REPL. COST NEW	AYB	EYB	ECON	FNCT		NORM	% COND
0110	01	2,505	100.1280	70.09	175,575	1973	1973	0	0	0	20.33	79.67

1 MH/SFR – 100% - 2022 Heated Area: 2209 HX Base Yr 2022

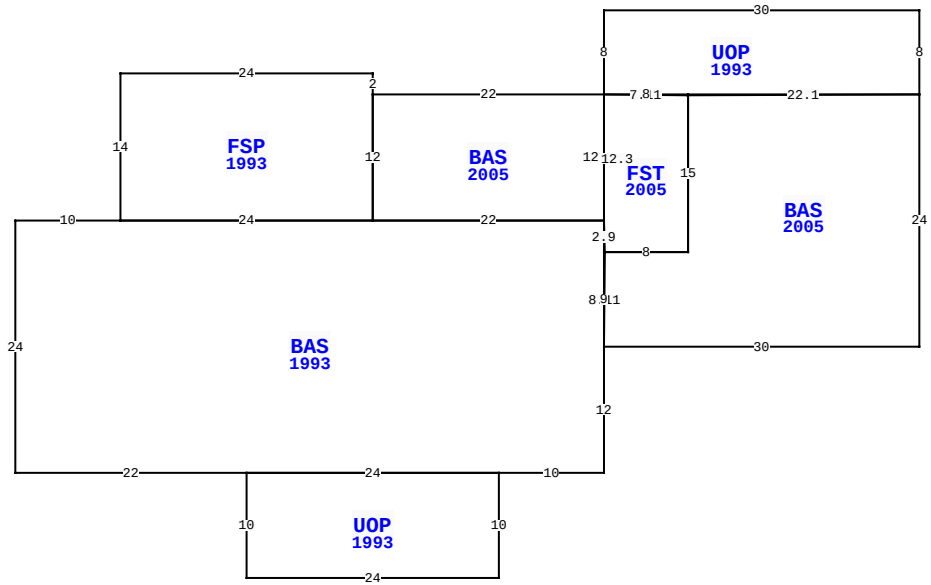

540591 LEM TURNER RD, CALLAHAN

BLD DATE		LGL DATE	
XF DATE		LAND DATE	
INC DATE		AG DATE	

NASSAU COUNTY PROPERTY

PAGE 1 of 1 6

VALUATION SUMMARY

VALUATION BY		STANDARD
Tax Group: 6	Tax Dist:	
BUILDING MARKET VALUE		139,881
TOTAL MARKET OB/XF VALUE		7,472
TOTAL LAND VALUE - MARKET		45,000
TOTAL MARKET VALUE		192,353
SOH/AGL Deduction		37,532
ASSESSED VALUE		154,821
TOTAL EXEMPTION VALUE	HX HB WX SX	105,000
BASE TAXABLE VALUE		49,821
TOTAL JUST VALUE		192,353
NCON VALUE		0
INCOME VALUE		
PREVIOUS YEAR MKT VALUE		150,312

BLDG:1:4: 1973 HC HARVARD (1977)

BLDG:1:3: RP: 407992 407993

PERMIT NUM	DESCRIPTION	AMT	ISSUED
R2307943	ROOF	15,000	06/21/2023

SALES DATA

OFF RECORD Number	DATE	TYPE INST	Q / U	V / I	RSN CD	SALE PRICE
2441/0272	2/24/2021	WD	Q	I	02	75,000
GRANTOR: HATCHER JENNIFER RENE						
GRANTEE: EDDY JOHN C & SHARO						
2133/0005	6/30/2017	WD	Q	I	01	74,000
GRANTOR: BOATRIGHT FLOYD D & V						
GRANTEE: HATCHER JENNIFER RE						

BUILDING NOTES

BUILDING DIMENSIONS

BAS=[YR=1993;ORIG=-52,20] W24 W10 S24 E22 E24 E10 N12
U8.11R0.1 U3.1L0.1 W22 $
BAS=[YR=2005;ORIG=-30,32] E30 N24 W22 S15 W8 S9 $
FSP=[YR=1993;ORIG=-52,8] N2 W24 S14 E24 N12 $
BAS=[YR=2005;ORIG=-30,8] W22 S12 E22 N12 $
UOP=[YR=1993;ORIG=0,0] W30 S8 D0.1R7.11 U0.1R22.1 N8 $
UOP=[YR=1993;ORIG=-64,44] S10 E24 N10 W24 $
FST=[YR=2005;ORIG=-30,8] S12.3 S2.9 E8 N15 W8 $
.

EXTRA FEATURES

LN	OB/XF CODE	DESCRIPTION	BLD	CAP	L	W	UNITS	UT	Adj R	ADJ UNIT PRICE	ORIG COND	YEAR ON	YEAR ACTUAL	Q	% COND	OB/XF MKT VALUE	NOTES
1	0811	CONCRETE B	0	100	0	0	832.00	SF	5.20	5.20	100	1987	1987	3	52	2,250	
2	0200	BARN WD 0-	0	100	30	29	870.00	SF	20.00	20.00	100	1994	1994	3	20	3,480	
3	0681	POLE SHED	0	100	22	22	484.00	SF	15.00	15.00	100	1996	1996	3	24	1,742	

LAND DESCRIPTION

TOTAL OB/XF 7,472

LN	USE CODE	CLS	LAND USE DESCRIPTION	CAP	RD	LOC ZONE	FRONT	DEPTH	TOT LND UTS	UNIT TYPE	DT	DPTH FACT	% COND	TOT ADJ	UNIT PRICE	ADJ UNIT PRICE	LAND VALUE	OTHER ADJUSTMENTS AND NOTES	YEAR	DENSITY	DECL	FRZ	YR	CONSRV
1	000102	C	SFR/MH	100		RM	150.00	303.00	1.00	LT		1.00	1.00	1.00	45,000.00	45,000.00	45,000							

REVIEW DATE 05/12/2019 BY KBA Total Acres: 0.00 Total Land Value: 45,000 Market: 0 Agricultural: 0 Common: 45,000 PRINTED 08/06/2024 BY SYS