TRACT 75
IN OR 2502/712
LEE STONER SHORES 3 UNR

HATCHER JASON & JENNIFER
54090 JANICE DRIVE
CALLAHAN, FL 32011

2024

37-1N-25-296C-0075-0000

BUILDING CHARACTERISTICS

ELEMENT	CD	CONSTRUCTION
Exterior Wall	20	FACE BRICK 100
Roof Structur	03	GABLE/HIP 100
Roof Cover	03	COMP SHNGL 100
Interior Wall	05	DRYWALL 100
Interior Floo	14	CARPET 90
Interior Floo	08	SHT VINYL 10
Air Condition	03	CENTRAL 100
Heating Type	04	AIR DUCTED 100
Bedrooms		3 100
Bathrooms		2 100
Frame	02	WOOD FRAME 100
Stories	2.	2. 100
Units		0 100
BUD8 Adjustme	06	DIST 1D 100
Occupancy	00	NONE 100
Quality	04	Quality Level 04
DOR CODE	0100	SINGLE FAMILY
MAP NUM		MKT AREA 08
NEIGHBORHOOD/LOC	8026.00	

AREA TYPE	TOTAL GROSS AREA	PCT OF BASE	TOT ADJ AREA	SUBAREA MARKET VALUE
BAS	1,296	100	1,296	140,904
FGR	600	55	330	35,879
FOP	45	30	14	1,522
FUS	1,560	100	1,560	169,607
TOTALS	3,501		3,200	347,912

MARKET ADJUSTMENTS

TYPE	MDL	EFF. AREA	TOT ADJ PTS	EFF. BASE RATE	REPL. COST NEW	AYB	EYB	ECON	FNCT		NORM	% COND
0900	01	3,200	101.4300	126.79	405,728	1999	2004	0	0	0	14.25	85.75

1 SNGL FAM – 100% - 2022 Heated Area: 2856 HX Base Yr 2022

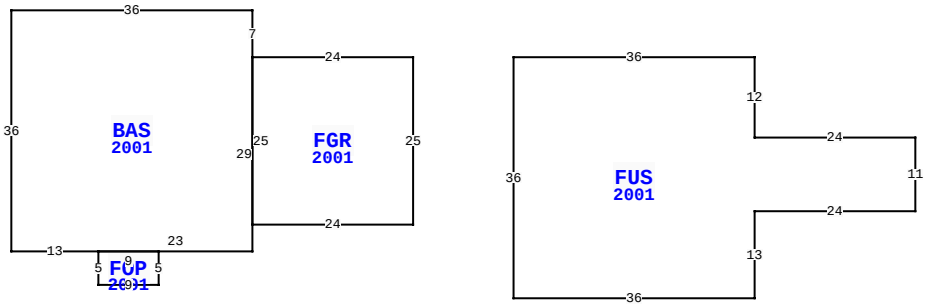

54090 JANICE DR, CALLAHAN

BLD DATE	
XF DATE	
INC DATE	
LGL DATE	
LAND DATE	
AG DATE	

NASSAU COUNTY PROPERTY

VALUATION SUMMARY

VALUATION BY		STANDARD
Tax Group: 6	Tax Dist:	
BUILDING MARKET VALUE		370,943
TOTAL MARKET OB/XF VALUE		7,076
TOTAL LAND VALUE - MARKET		45,000
TOTAL MARKET VALUE		423,019
SOH/AGL Deduction		49,636
ASSESSED VALUE		373,383
TOTAL EXEMPTION VALUE	HX HB	50,000
BASE TAXABLE VALUE		323,383
TOTAL JUST VALUE		423,019
NCON VALUE		0
INCOME VALUE		
PREVIOUS YEAR MKT VALUE		408,753

PERMIT NUM	DESCRIPTION	AMT	ISSUED
B2204518	GARAGE	35,928	03/23/2022
21006466	REPAIR/RRF	12,000	05/19/2021

SALES DATA

OFF RECORD Number	DATE	TYPE INST	Q / U	V / I	RSN CD	SALE PRICE
2502/0712	10/01/2021	WD	U	I	11	100

GRANTOR: BOATRIGHT QUINCY A &
GRANTEE: HATCHER JASON & JEN

BUILDING NOTES

BUILDING DIMENSIONS

FGR=[YR=2001] W24 BAS=[YR=2001] N7 W36 S36 E13
FOP=[YR=2001] S5 E9 N5 W9 $ E23 N29 $ S25 E24 N25 $ PTR= E15
FUS=[YR=2001] E36 S12 E24 S11 W24 S13 W36 N36 $ W15 $.

EXTRA FEATURES

LN	OB/XF CODE	DESCRIPTION	BLD	CAP	L	W	UNITS	UT	Adj R	ADJ UNIT PRICE	ORIG COND	YEAR ON	YEAR ACTUAL	Q	% COND	OB/XF MKT VALUE	NOTES
1	0940	SHEDS/PORT	0	100	8	12	96.00	SF	19.50	19.50	100	1985	1985	3	20	374	
2	0504	FP-ELECTRI	0	100	0	0	1.00	UT	2,000.00	2,000.00	100	1999	1999	3	83	1,660	
3	0812	CONCRETE C	0	100	0	0	1,637.00	SF	4.00	4.00	100	1999	1999	3	77	5,042	

LAND DESCRIPTION

TOTAL OB/XF 7,076

LN	USE CODE	CLS	LAND USE DESCRIPTION	CAP	RD	LOC ZONE	FRONT	DEPTH	TOT LND UTS	UNIT TYPE	DT	DPTH FACT	% COND	TOT ADJ	UNIT PRICE	ADJ UNIT PRICE	LAND VALUE	OTHER ADJUSTMENTS AND NOTES	YEAR	DENSITY	DECL	FRZ	YR	CONSRV
1	000100	C	SFR	100	0006	RM	0.00	0.00	1.00	LT		1.00	1.00	1.00	45,000.00	45,000.00	45,000							

REVIEW DATE 11/12/2021 BY KB Total Acres: 0.00 Total Land Value: 45,000 Market: 0 Agricultural: 0 Common: 45,000 PRINTED 08/06/2024 BY SYS

TRACT 75
IN OR 2502/712
LEE STONER SHORES 3 UNR

HATCHER JASON & JENNIFER
54090 JANICE DRIVE
CALLAHAN, FL 32011

2024

37-1N-25-296C-0075-0000

NASSAU COUNTY PROPERTY

BUILDING CHARACTERISTICS

ELEMENT	CD	CONSTRUCTION
Exterior Wall	25	MOD METAL 100
Roof Structur	10	STEEL FRME 100
Roof Cover	12	MODULAR MT 100
Interior Wall	07	NONE 100
Interior Floo	03	CONC FINSH 100
Air Condition	01	NONE 100
Heating Type	01	NONE 100
Bedrooms		0 100
Bathrooms		0 100
Frame	05	STEEL 100
Stories	1.	1. 100
Units		0 100
Occupancy	00	NONE 100
Quality	06	Quality Level 06
DOR CODE	0100	SINGLE FAMILY
MAP NUM		MKT AREA 08
NEIGHBORHOOD/LOC	8026.00	

AREA TYPE	TOTAL GROSS AREA	PCT OF BASE	TOT ADJ AREA	SUBAREA MARKET VALUE
BAS	400	100	400	8,236
TOTALS	400		400	8,236

MARKET ADJUSTMENTS

TYPE	MDL	EFF. AREA	TOT ADJ PTS	EFF. BASE RATE	REPL. COST NEW	AYB	EYB	ECON	FNCT		NORM	% COND
6500	01	400	63.2500	22.14	8,856	2016	2016	0	0	0	7.00	93.00

2 GARAGE RES – 100% - 2022 Heated Area: 400 HX Base Yr 2022

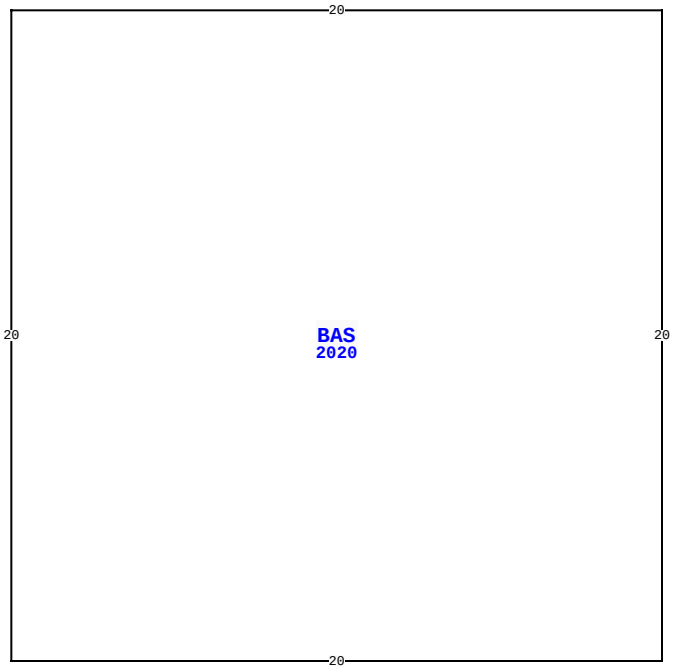

54090 JANICE DR, CALLAHAN

BLD DATE		LGL DATE	
XF DATE		LAND DATE	
INC DATE		AG DATE	

NASSAU COUNTY PROPERTY — VALUATION SUMMARY

VALUATION BY		STANDARD
Tax Group: 6	Tax Dist:	
BUILDING MARKET VALUE		370,943
TOTAL MARKET OB/XF VALUE		7,076
TOTAL LAND VALUE - MARKET		45,000
TOTAL MARKET VALUE		423,019
SOH/AGL Deduction		49,636
ASSESSED VALUE		373,383
TOTAL EXEMPTION VALUE	HX HB	50,000
BASE TAXABLE VALUE		323,383
TOTAL JUST VALUE		423,019
NCON VALUE		0
INCOME VALUE		
PREVIOUS YEAR MKT VALUE		408,753

PERMIT NUM	DESCRIPTION	AMT	ISSUED

SALES DATA

OFF RECORD Number	DATE	TYPE INST	Q / U	V / I	RSN CD	SALE PRICE
2502/0712	10/01/2021	WD	U	I	11	100

GRANTOR: BOATRIGHT QUINCY A &
GRANTEE: HATCHER JASON & JEN

BUILDING NOTES

BUILDING DIMENSIONS

BAS=[YR=2020] W20 S20 E20 N20$.

EXTRA FEATURES

L N	OB/XF CODE	DESCRIPTION	BLD	CAP	L	W	UNITS	UT	Adj R	ADJ UNIT PRICE	ORIG COND	YEAR ON	YEAR ACTUAL	Q	% COND	OB/XF MKT VALUE	NOTES

LAND DESCRIPTION

TOTAL OB/XF 0

L N	USE CODE	CLS	LAND USE DESCRIPTION	CAP	R D	LOC ZONE	FRONT	DEPTH	TOT LND UTS	UNIT TYPE	D T	DPTH FACT	% COND	TOT ADJ	UNIT PRICE	ADJ UNIT PRICE	LAND VALUE	OTHER ADJUSTMENTS AND NOTES	YEAR	DENSITY	DECL	FRZ	YR	CONSRV

REVIEW DATE 11/12/2021 BY KB Total Acres: 0.00 Total Land Value: 45,000 Market: 0 Agricultural: 0 Common: 45,000 PRINTED 08/06/2024 BY SYS

TRACT 75
IN OR 2502/712
LEE STONER SHORES 3 UNR

HATCHER JASON & JENNIFER
54090 JANICE DRIVE
CALLAHAN, FL 32011

2024

37-1N-25-296C-0075-0000

NASSAU COUNTY PROPERTY

BUILDING CHARACTERISTICS

ELEMENT	CD	CONSTRUCTION
Exterior Wall	25	MOD METAL 100
Roof Structur	10	STEEL FRME 100
Roof Cover	12	MODULAR MT 100
Interior Wall	07	NONE 100
Interior Floo	03	CONC FINSH 100
Air Condition	01	NONE 100
Heating Type	01	NONE 100
Bedrooms		0 100
Bathrooms		0 100
Frame	05	STEEL 100
Stories	1.	1. 100
Units		0 100
Occupancy	00	NONE 100
Quality	06	Quality Level 06

DOR CODE	0100	SINGLE FAMILY	
MAP NUM		MKT AREA	08
NEIGHBORHOOD/LOC	8026.00		

AREA TYPE	TOTAL GROSS AREA	PCT OF BASE	TOT ADJ AREA	SUBAREA MARKET VALUE
BAS	600	100	600	13,151
FCP	300	25	75	1,644
TOTALS	900		675	14,795

MARKET ADJUSTMENTS

TYPE	MDL	EFF. AREA	TOT ADJ PTS	EFF. BASE RATE	REPL. COST NEW	AYB	EYB	ECON	FNCT		NORM	% COND
6500	01	675	63.2500	22.14	14,944	2022	2022	0	0	0	1.00	99.00

3 GARAGE RES – 100% - 2022 Heated Area: 600 HX Base Yr 2022

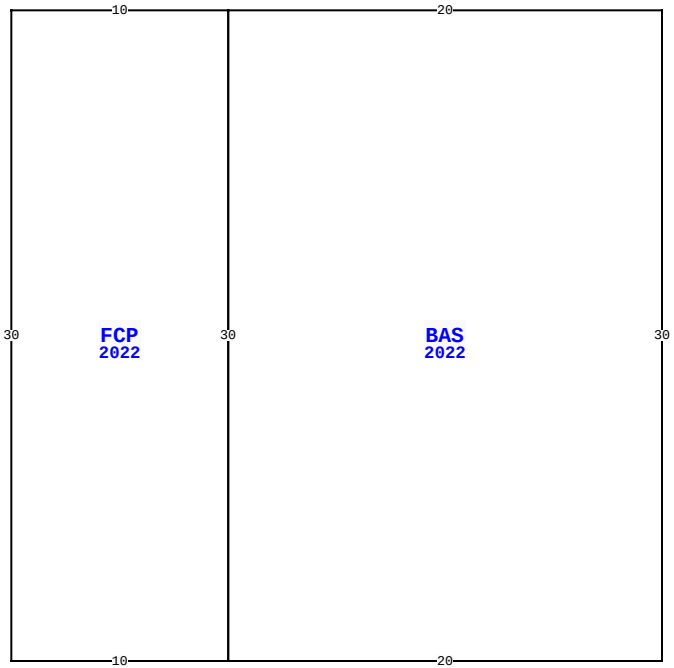

54090 JANICE DR, CALLAHAN

BLD DATE		LGL DATE	
XF DATE		LAND DATE	
INC DATE		AG DATE	

VALUATION SUMMARY

VALUATION BY		STANDARD
Tax Group: 6	Tax Dist:	
BUILDING MARKET VALUE		370,943
TOTAL MARKET OB/XF VALUE		7,076
TOTAL LAND VALUE - MARKET		45,000
TOTAL MARKET VALUE		423,019
SOH/AGL Deduction		49,636
ASSESSED VALUE		373,383
TOTAL EXEMPTION VALUE	HX HB	50,000
BASE TAXABLE VALUE		323,383
TOTAL JUST VALUE		423,019
NCON VALUE		0
INCOME VALUE		
PREVIOUS YEAR MKT VALUE		408,753

PERMIT NUM	DESCRIPTION	AMT	ISSUED

SALES DATA

OFF RECORD Number	DATE	TYPE INST	Q / U	V / I	RSN CD	SALE PRICE
2502/0712	10/01/2021	WD	U	I	11	100

GRANTOR: BOATRIGHT QUINCY A &

GRANTEE: HATCHER JASON & JEN

BUILDING NOTES

BUILDING DIMENSIONS

BAS=[YR=2022] W20 FCP=[YR=2022] W10 S30 E10 N30$ S30 E20 N30$.

EXTRA FEATURES

LN	OB/XF CODE	DESCRIPTION	BLD	CAP	L	W	UNITS	UT	Adj R	ADJ UNIT PRICE	ORIG COND	YEAR ON	YEAR ACTUAL	Q	% COND	OB/XF MKT VALUE	NOTES

LAND DESCRIPTION

TOTAL OB/XF 0

LN	USE CODE	CLS	LAND USE DESCRIPTION	CAP	RD	LOC ZONE	FRONT	DEPTH	TOT LND UTS	UNIT TYPE	DT	DPTH FACT	% COND	TOT ADJ	UNIT PRICE	ADJ UNIT PRICE	LAND VALUE	OTHER ADJUSTMENTS AND NOTES	YEAR	DENSITY	DECL	FRZ	YR	CONSRV

REVIEW DATE 11/12/2021 BY KB Total Acres: 0.00 Total Land Value: 45,000 Market: 0 Agricultural: 0 Common: 45,000 PRINTED 08/06/2024 BY SYS