LOT 38
DEERFIELD ACRES PB 5/299

FLORES ANDREA J & MIGUEL JR
54019 JESSICA PL
CALLAHAN, FL 32011

2024

37-1N-25-0340-0038-0000

NASSAU COUNTY PROPERTY

BUILDING CHARACTERISTICS

ELEMENT	CD	CONSTRUCTION
Exterior Wall	20	FACE BRICK 90
Exterior Wall	05	AVERAGE 10
Roof Structur	03	GABLE/HIP 100
Roof Cover	03	COMP SHNGL 100
Interior Wall	05	DRYWALL 100
Interior Floo	11	CLAY TILE 50
Interior Floo	14	CARPET 50
Air Condition	03	CENTRAL 100
Heating Type	04	AIR DUCTED 100
Bedrooms		3 100
Bathrooms		3 100
Frame	02	WOOD FRAME 100
Stories	1.	1. 100
Units		0 100
Occupancy	00	NONE 100
Quality	06	Quality Level 06
DOR CODE	0100	SINGLE FAMILY
MAP NUM		MKT AREA 08
NEIGHBORHOOD/LOC	8027.00	

AREA TYPE	TOTAL GROSS AREA	PCT OF BASE	TOT ADJ AREA	SUBAREA MARKET VALUE
BAS	1,316	100	1,316	159,898
BAS	288	100	288	34,993
BAS	379	100	379	46,050
BAS	504	100	504	61,238
FGR	648	55	356	43,256
FOP	96	30	29	3,524
FOP	48	30	14	1,701
FOP	246	30	74	8,991
FOP	100	30	30	3,645
FUS	480	100	480	58,321
TOTALS	4,105		3,470	421,618

MARKET ADJUSTMENTS

TYPE	MDL	EFF. AREA	TOT ADJ PTS	EFF. BASE RATE	REPL. COST NEW	AYB	EYB	ECON	FNCT		NORM	% COND
0900	01	3,470	120.8236	151.03	524,074	1992	1996	0	0	0	19.55	80.45

1 SNGL FAM – 100% - 2024 Heated Area: 2967 HX Base Yr

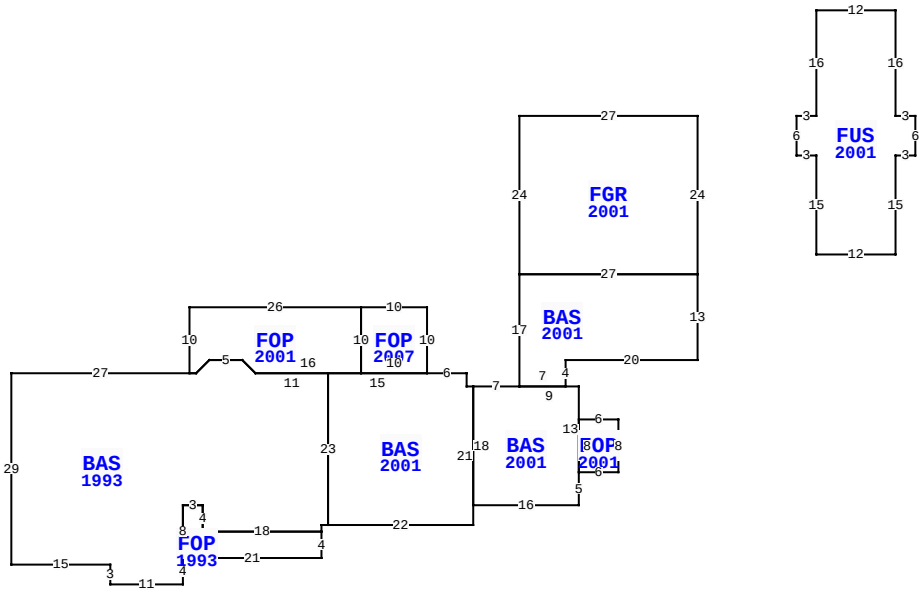

54019 JESSICA PL, CALLAHAN

BLD DATE		LGL DATE	
XF DATE		LAND DATE	
INC DATE		AG DATE	

VALUATION SUMMARY

VALUATION BY		STANDARD
Tax Group: 6	Tax Dist:	
BUILDING MARKET VALUE		421,618
TOTAL MARKET OB/XF VALUE		17,734
TOTAL LAND VALUE - MARKET		40,000
TOTAL MARKET VALUE		479,352
SOH/AGL Deduction		0
ASSESSED VALUE		479,352
TOTAL EXEMPTION VALUE	13	479,352
BASE TAXABLE VALUE		0
TOTAL JUST VALUE		479,352
NCON VALUE		0
INCOME VALUE		
PREVIOUS YEAR MKT VALUE		462,158

PERMIT NUM	DESCRIPTION	AMT	ISSUED
B985238	NEW CONSTR	52,560	08/01/1998
E940881	SWIM POOL	900	04/01/1994
7751	NEW CONSTR	57,146	01/06/1992

SALES DATA

OFF RECORD Number	DATE	TYPE INST	Q / U	V / I	RSN CD	SALE PRICE
2495/0678	9/08/2021	WD	Q	I	01	450,000
GRANTOR: WALKER BETHJAMIE Z ET						
GRANTEE: FLORES ANDREA J & M						
2488/1465	8/12/2021	FJ	U	I	11	0
GRANTOR: WALKER RICHARD K EST						
GRANTEE: WALKER BETHJAMIE Z						

BUILDING NOTES

BUILDING DIMENSIONS

FGR=[YR=2001] W27 S24 BAS=[YR=2001] S17 BAS=[YR=2001] W7 BAS=[YR=2001] W1 N2 W6 FOP=[YR=2007] N10 W10 FOP=[YR=2001] W26 S10 BAS=[YR=1993] W27 S29 E15 S3 E11 N4 FOP=[YR=1993] E21 N4 W18 N4 W3 S8 $ N8 E3 S4 E18 N1 E1 N23 W11 U2 L2 W5 L2 D2 W1$ E1 U2 R2 E5 R2 D2 E16 N10$ S10 E10$ W15 S23 E22 N21$ S18 E16 N5 FOP=[YR=2001] E6 N8 W6 S8$ N13 W9 $ E7 N4 E20 N13 W27$ E27 N24$ PTR= E15 FUS=[YR=2001] E3 N16 E12 S16 E3 S6 W3 S15 W12 N15 W3 N6 $ W15 $.

EXTRA FEATURES

LN	OB/XF CODE	DESCRIPTION	BLD	CAP	L	W	UNITS	UT	Adj R	ADJ UNIT PRICE	ORIG COND	YEAR ON	YEAR ACTUAL	Q	% COND	OB/XF MKT VALUE	NOTES
1	0500	FP-PRE FAB	0	100	0	0	1.00	UT	3,500.00	3,500.00	100	1992	1992	3	72	2,520	
2	0861	POOL GUNIT	0	100	15	30	450.00	SF	85.00	85.00	100	1994	1994	3	20	7,650	
3	0845	KOOL DECK	0	100	0	0	776.00	SF	7.25	7.25	100	1994	1994	3	68	3,826	
4	0812	CONCRETE C	0	100	0	0	1,460.00	SF	4.00	4.00	100	1992	1992	3	64	3,738	

LAND DESCRIPTION

TOTAL OB/XF 17,734

LN	USE CODE	CLS	LAND USE DESCRIPTION	CAP	RD	LOC ZONE	FRONT	DEPTH	TOT LND UTS	UNIT TYPE	DT	DPTH FACT	% COND	TOT ADJ	UNIT PRICE	ADJ UNIT PRICE	LAND VALUE	OTHER ADJUSTMENTS AND NOTES	YEAR	DENSITY	DECL	FRZ	YR	CONSRV
1	000100	C	SFR	100		RSF-1	0.00	0.00	1.00	LT		1.00	1.00	1.00	40,000.00	40,000.00	40,000							

REVIEW DATE 06/03/2024 BY TWA Total Acres: 0.00 Total Land Value: 40,000 Market: 0 Agricultural: 0 Common: 40,000 PRINTED 08/06/2024 BY SYS