IN OR 2711/1860

CALLAHAN COUNTRY RV RESORT LLC
405 GOLFWAY W DR STE 300
ST AUGUSTINE, FL 32095

2024

37-1N-25-0000-0004-0040

BUILDING CHARACTERISTICS

ELEMENT	CD	CONSTRUCTION
Exterior Wall	31	HARDIE BRD 100
Roof Structur	08	IRREGULAR 100
Roof Cover	03	COMP SHNGL 100
Interior Wall	05	DRYWALL 100
Interior Floo	12	HARDWOOD 50
Interior Floo	14	CARPET 50
Air Condition	03	CENTRAL 100
Heating Type	04	AIR DUCTED 100
Bedrooms		4 100
Bathrooms		3 100
Frame	02	WOOD FRAME 100
Stories	2.	2. 100
Units		0 100
Occupancy	00	NONE 100
Quality	03	Quality Level 03
DOR CODE	0100	SINGLE FAMILY
MAP NUM		MKT AREA 08
NEIGHBORHOOD/LOC	8026.00	

AREA TYPE	TOTAL GROSS AREA	PCT OF BASE	TOT ADJ AREA	SUBAREA MARKET VALUE
BAS	2,646	100	2,646	287,218
BAS	610	100	610	66,214
FGR	744	55	409	44,396
FOP	737	30	221	23,989
FST	72	55	40	4,342
FST	341	55	188	20,407
FUS	1,442	100	1,442	156,526
TOTALS	6,592		5,556	603,091

MARKET ADJUSTMENTS

TYPE	MDL	EFF. AREA	TOT ADJ PTS	EFF. BASE RATE	REPL. COST NEW	AYB	EYB	ECON	FNCT		NORM	% COND
0900	01	5,556	103.0750	128.84	715,835	1989	1989	0	0	0	15.75	84.25

1 SNGL FAM – 100% - 1995 Heated Area: 4698 HX Base Yr 1995

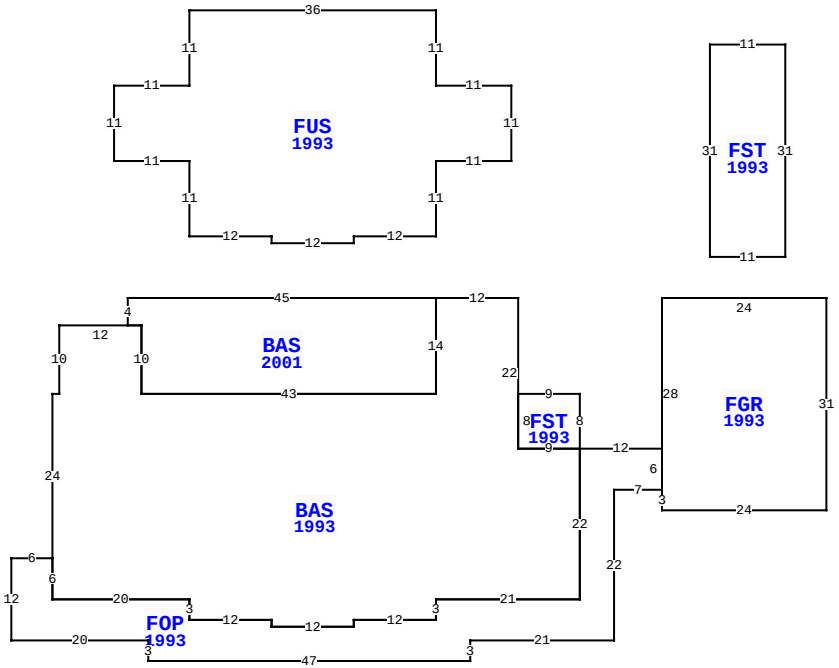

54001 SERENDIPITY LN, CALLAHAN

BLD DATE		LGL DATE	
XF DATE		LAND DATE	05/19/2023 MLU
INC DATE		AG DATE	

NASSAU COUNTY PROPERTY

PAGE 1 of 2 6

VALUATION SUMMARY

VALUATION BY		STANDARD
Tax Group: 6	Tax Dist:	
BUILDING MARKET VALUE		603,091
TOTAL MARKET OB/XF VALUE		67,815
TOTAL LAND VALUE - MARKET		149,280
TOTAL MARKET VALUE		820,186
SOH/AGL Deduction		401,789
ASSESSED VALUE		418,397
TOTAL EXEMPTION VALUE	HX HB	50,000
BASE TAXABLE VALUE		368,397
TOTAL JUST VALUE		820,186
NCON VALUE		0
INCOME VALUE		
PREVIOUS YEAR MKT VALUE		725,232

REAR FSP 93 HAS GLASS WINDOWS & A/C VENTS = BAS200

11 X 31 FST IS ABOVE FGR

PERMIT NUM	DESCRIPTION	AMT	ISSUED
B20-11818	REPLACE 5 WINDOWS	3,800	12/01/2020
B973935	SWIM POOL	10,000	05/01/1997
2862	H/AC	10,000	12/29/1988
5241	NEW CONSTR	7,955	07/22/1988
4956	NEW CONSTR	154,658	06/13/1988

SALES DATA

OFF RECORD Number	DATE	TYPE INST	Q / U	V / I	RSN CD	SALE PRICE
2711/1860	5/13/2024	WD	Q	I	01	850,000
GRANTOR: HAMRICK STEWART L & P						
GRANTEE: CALLAHAN COUNTRY RV						
0716/1675	10/26/1994	WD	Q	I		325,000
GRANTOR: BEST L A JR & LINDA H						
GRANTEE: HAMRICK STEWART L &						

BUILDING NOTES

BUILDING DIMENSIONS

BAS=[YR=1993;ORIG=0,0] W12 S14 W43 N10 W12 S10 W1 S24 S6 E20 S3 E12 S1 E12 N1 E12 N3 E21 N22 W9 N22 $
FUS=[YR=1993;ORIG=-24,-8] N1 E12 N11 E11 N11 W11 N11 W36 S11 W11 S11 E11 S11 E12 S1 E12 $
FGR=[YR=1993;ORIG=21,28] S3 E24 N31 W24 S28 $
FOP=[YR=1993;ORIG=-68,38] W6 S12 E20 S3 E47 N3 E21 N22 E7 N6 W12 S22 W21 S3 W12 S1 W12 N1 W12 N3 W20 N6 $
BAS=[YR=2001;ORIG=-12,0] W45 S4 E2 S10 E43 N14 $
FST=[YR=1993;ORIG=28,-37] E11 S31 W11 N31 $
FST=[YR=1993;ORIG=9,22] N8 W9 S8 E9 $
PTR=[ORIG=0,0] E60 W60 $
.

EXTRA FEATURES

LN	OB/XF CODE	DESCRIPTION	BLD	CAP	L	W	UNITS	UT	Adj R	ADJ UNIT PRICE	ORIG COND	YEAR ON	YEAR ACTUAL	Q	% COND	OB/XF MKT VALUE	NOTES
1	0812	CONCRETE C	0	100	0	0	2,553.00	SF	4.00	4.00	100	1990	1990	3	59.5	6,076	
2	0500	FP-PRE FAB	0	100	0	0	1.00	UT	3,500.00	3,500.00	100	1989	1989	3	66	2,310	
3	0500	FP-PRE FAB	0	100	0	0	1.00	UT	3,500.00	3,500.00	100	1989	1989	3	66	2,310	
4	0504	FP-ELECTRI	0	100	0	0	1.00	UT	2,000.00	2,000.00	100	1989	1989	3	66	1,320	
5	0861	POOL GUNIT	0	100	15	30	450.00	SF	85.00	85.00	100	1997	1997	3	20	7,650	
6	0845	KOOL DECK	0	100	0	0	614.00	SF	7.25	7.25	100	1997	1997	3	73	3,250	
7	0350	CARPORT WD	0	100	15	30	450.00	SF	13.00	13.00	100	1990	1990	3	20	1,170	
8	0825	BRICK	0	100	0	0	842.00	SF	9.38	9.38	100	1990	1990	3	86	6,789	
9	0200	BARN WD 0-	0	100	25	30	750.00	SF	20.00	20.00	100	1988	1988	3	20	3,000	
10	0991	TENNIS CRT	0	100	0	0	1.00	UT	18,000.00	18,000.00	100	1997	1997	3	73	13,140	

TOTAL OB/XF 47,015

LAND DESCRIPTION

LN	USE CODE	CLS	LAND USE DESCRIPTION	CAP	RD	LOC ZONE	FRONT	DEPTH	TOT LND UTS	UNIT TYPE	DT	DPTH FACT	% COND	TOT ADJ	UNIT PRICE	ADJ UNIT PRICE	LAND VALUE	OTHER ADJUSTMENTS AND NOTES	YEAR	DENSITY	DECL	FRZ	YR	CONSRV
1	000115	C	SFR ACRES	100	0004	RSF-2	0.00	0.00	9.33	AC		1.00	1.00	1.00	16,000.00	16,000.00	149,280							

REVIEW DATE 01/06/2023 BY KWA Total Acres: 9.33 Total Land Value: 149,280 Market: 0 Agricultural: 0 Common: 149,280 PRINTED 08/06/2024 BY SYS

IN OR 2711/1860

CALLAHAN COUNTRY RV RESORT LLC
405 GOLFWAY W DR STE 300
ST AUGUSTINE, FL 32095

2024

37-1N-25-0000-0004-0040

BUILDING CHARACTERISTICS

ELEMENT	CD	CONSTRUCTION

DOR CODE	0100	SINGLE FAMILY	
MAP NUM		MKT AREA	08
NEIGHBORHOOD/LOC	8026.00		

AREA TYPE	TOTAL GROSS AREA	PCT OF BASE	TOT ADJ AREA	SUBAREA MARKET VALUE
TOTALS				

MARKET ADJUSTMENTS

TYPE	MDL	EFF. AREA	TOT ADJ PTS	EFF. BASE RATE	REPL. COST NEW	AYB	EYB	ECON	FNCT		NORM	% COND

BLD DATE		LGL DATE	
XF DATE		LAND DATE	05/19/2023 MLU
INC DATE		AG DATE	

NASSAU COUNTY PROPERTY

PAGE 2 of 2 6

VALUATION SUMMARY

VALUATION BY		STANDARD
Tax Group: 6	Tax Dist:	
BUILDING MARKET VALUE		603,091
TOTAL MARKET OB/XF VALUE		67,815
TOTAL LAND VALUE - MARKET		149,280
TOTAL MARKET VALUE		820,186
SOH/AGL Deduction		401,789
ASSESSED VALUE		418,397
TOTAL EXEMPTION VALUE	HX HB	50,000
BASE TAXABLE VALUE		368,397
TOTAL JUST VALUE		820,186
NCON VALUE		0
INCOME VALUE		
PREVIOUS YEAR MKT VALUE		725,232

PERMIT NUM	DESCRIPTION	AMT	ISSUED

SALES DATA

OFF RECORD Number	DATE	TYPE INST	Q / U	V / I	RSN CD	SALE PRICE
2711/1860	5/13/2024	WD	Q	I	01	850,000
GRANTOR: HAMRICK STEWART L & P						
GRANTEE: CALLAHAN COUNTRY RV						
0716/1675	10/26/1994	WD	Q	I		325,000
GRANTOR: BEST L A JR & LINDA H						
GRANTEE: HAMRICK STEWART L &						

BUILDING NOTES

BUILDING DIMENSIONS

EXTRA FEATURES

LN	OB/XF CODE	DESCRIPTION	BLD	CAP	L	W	UNITS	UT	Adj R	ADJ UNIT PRICE	ORIG COND	YEAR ON	YEAR ACTUAL	Q	% COND	OB/XF MKT VALUE	NOTES
12	0812	CONCRETE C	0	100	0	0	1,669.00	SF	4.00	4.00	100	1999	1999	3	77	5,141	
13	0479	VF PICKET	0	100	0	0	521.00	LF	10.00	10.00	100	2006	2006	3	69	3,595	
14	0470	VNYL GATE	0	100	0	0	4.00	UT	300.00	300.00	100	2006	2006	3	69	828	
15	0803	ASPHALT C	0	100	0	0	9,686.00	SF	2.00	2.00	100	2006	2006	3	58	11,236	

LAND DESCRIPTION

TOTAL OB/XF 20,800

LN	USE CODE	CLS	LAND USE DESCRIPTION	CAP	RD	LOC ZONE	FRONT	DEPTH	TOT LND UTS	UNIT TYPE	DT	DPTH FACT	% COND	TOT ADJ	UNIT PRICE	ADJ UNIT PRICE	LAND VALUE	OTHER ADJUSTMENTS AND NOTES	YEAR	DENSITY	DECL	FRZ	YR	CONSRV

REVIEW DATE 01/06/2023 BY KWA Total Acres: 9.33 Total Land Value: 149,280 Market: 0 Agricultural: 0 Common: 149,280 PRINTED 08/06/2024 BY SYS