PT OF LOT 1 PT OR 2520/1735
BEING PARCEL VYA
J H WHITTEMORE HEIRS SUB

COHREN SCOTT E & DONNA
6387 CHURCH AVE
BRYCEVILLE, FL 32009

2024

37-1N-24-2220-0001-0150

NASSAU COUNTY PROPERTY

BUILDING CHARACTERISTICS

ELEMENT	CD	CONSTRUCTION
Exterior Wall	31	HARDIE BRD 100
Roof Structur	03	GABLE/HIP 100
Roof Cover	03	COMP SHNGL 100
Interior Wall	05	DRYWALL 100
Interior Floo	13	LVT/LAMNT 60
Interior Floo	14	CARPET 40
Air Condition	03	CENTRAL 100
Heating Type	04	AIR DUCTED 100
Bedrooms		5 100
Bathrooms		4 100
Frame	02	WOOD FRAME 100
Stories	2.	2. 100
Units		0 100
Quality	03	Quality Level 03
DOR CODE	5000	IMPROVED AG
MAP NUM		MKT AREA 08
NEIGHBORHOOD/LOC	8001.00	

AREA TYPE	TOTAL GROSS AREA	PCT OF BASE	TOT ADJ AREA	SUBAREA MARKET VALUE
BAS	2,148	100	2,148	260,381
FGR	693	55	381	46,185
FOP	330	30	99	12,001
FOP	762	30	229	27,759
FUS	1,233	100	1,233	149,464
STR	56	10	6	727
TOTALS	5,222		4,096	496,517

MARKET ADJUSTMENTS

TYPE	MDL	EFF. AREA	TOT ADJ PTS	EFF. BASE RATE	REPL. COST NEW	AYB	EYB	ECON	FNCT		NORM	% COND
0900	01	4,096	96.9760	121.22	496,517	2023	2023	0	0	0	0.00	100.00

2 SNGL FAM – 100% - 2024 Heated Area: 3381 HX Base Yr 2024

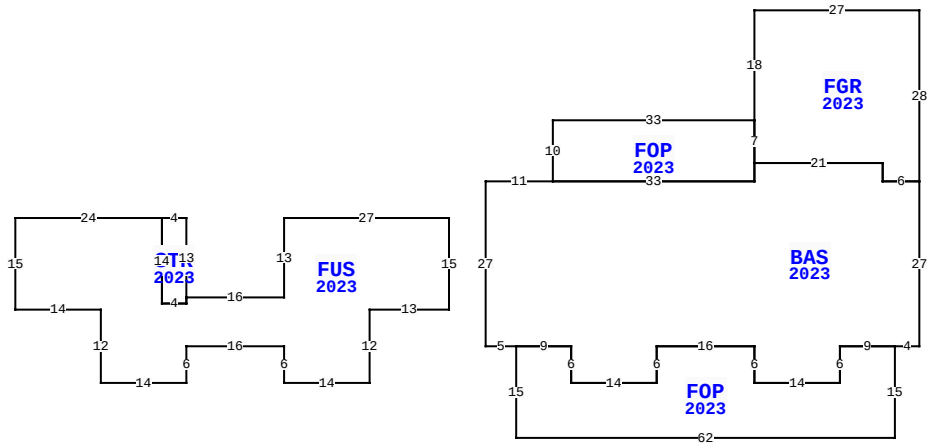

13500 VINEYARD DR, BRYCEVILLE

BLD DATE		LGL DATE	
XF DATE		LAND DATE	06/15/2023 MLU
INC DATE		AG DATE	

NASSAU COUNTY PROPERTY

VALUATION SUMMARY

VALUATION BY		STANDARD
Tax Group: 6	Tax Dist:	
BUILDING MARKET VALUE		496,517
TOTAL MARKET OB/XF VALUE		5,000
TOTAL LAND VALUE - MARKET		130,250
TOTAL MARKET VALUE		532,419
SOH/AGL Deduction		40,014
ASSESSED VALUE		492,405
TOTAL EXEMPTION VALUE	HX HB	50,000
BASE TAXABLE VALUE		442,405
TOTAL JUST VALUE		631,767
NCON VALUE		501,517
INCOME VALUE		
PREVIOUS YEAR MKT VALUE		95,190

PERMIT NUM	DESCRIPTION	AMT	ISSUED
230008310			06/28/2023
22007558	NEW CONSTR	580,258	05/13/2022
18010085	GARAGE	0	10/04/2018

SALES DATA

OFF RECORD Number	DATE	TYPE INST	Q / U	V / I	RSN CD	SALE PRICE
2520/1735	12/10/2021	WD	U	V	11	100
GRANTOR: COTHREN SCOTT E & DON						
GRANTEE: COTHREN SCOTT E & D						
2430/1434	1/13/2021	QC	U	V	11	100
GRANTOR: COTHREN SCOTT E & DON						
GRANTEE: COTHREN SCOTT E & D						

BUILDING NOTES

EXTRA FEATURES

LN	OB/XF CODE	DESCRIPTION	BLD	CAP	L	W	UNITS	UT	Adj R	ADJ UNIT PRICE	ORIG COND	YEAR ON	YEAR ACTUAL	Q	% COND	OB/XF MKT VALUE	NOTES
1	0501	FP-AVERAGE	0	100	0	0	1.00	UT	5,000.00	5,000.00	100	2024	2023		100	5,000	

BUILDING DIMENSIONS

BAS=[YR=2023;ORIG=170,45] N27 W6 N3 W21 S3 W33 W11 S27 E5 E9 S6 E14 N6 E16 S6 E14 N6 E9 E4 $
FGR=[YR=2023;ORIG=170,-10] W27 S18 S7 E21 S3 E6 N28 $
FOP=[YR=2023;ORIG=143,8] W33 S10 E33 N3 N7 $
FOP=[YR=2023;ORIG=166,45] W9 S6 W14 N6 W16 S6 W14 N6 W9 S15 E62 N15 $
FUS=[YR=2023;ORIG=80,51] N12 E13 N15 W27 S13 W16 S1 W4 N14 W24 S15 E14 S12 E14 N6 E16 S6 E14 $
STR=[YR=2023;ORIG=50,24] W4 S14 E4 N1 N13 $
.

LAND DESCRIPTION

TOTAL OB/XF 5,000

LN	USE CODE	CLS	LAND USE DESCRIPTION	CAP	RD	LOC ZONE	FRONT	DEPTH	TOT LND UTS	UNIT TYPE	DT	DPTH FACT	% COND	TOT ADJ	UNIT PRICE	ADJ UNIT PRICE	LAND VALUE	OTHER ADJUSTMENTS AND NOTES	YEAR	DENSITY	DECL	FRZ	YR	CONSRV
1	005000	C	RURAL HOME	100		OR			1.00	AC		1.00	1.00	1.00	30,000.00	30,000.00	30,000							
2	005901	A	HARDWOOD SI	0		OR	0.00	0.00	4.01	AC		1.00	1.00	1.00	225.00	225.00	902							
3	009910	M	MKT.VAL.AG	0		OR	0.00	0.00	4.01	AC		1.00	1.00	1.00	25,000.00	25,000.00	100,250							

REVIEW DATE 07/18/2023 BY WW Total Acres: 5.01 Total Land Value: 30,902 Market: 100,250 Agricultural: 902 Common: 30,000 PRINTED 08/06/2024 BY SYS