IN OR 85 PG 247

TIMMONS ANNA B
58230 TIMMONS ROAD
HILLIARD, FL 32046

2024

35-4N-25-0000-0008-0010

BUILDING CHARACTERISTICS

ELEMENT	CD	CONSTRUCTION
Exterior Wall	19	COMMON BRK 100
Roof Structur	03	GABLE/HIP 100
Roof Cover	03	COMP SHNGL 100
Interior Wall	05	DRYWALL 100
Interior Floo	14	CARPET 80
Interior Floo	08	SHT VINYL 20
Air Condition	03	CENTRAL 100
Heating Type	04	AIR DUCTED 100
Bedrooms		4 100
Bathrooms		2 100
Frame	02	WOOD FRAME 100
Stories	1.	1. 100
Units		0 100
BUD8 Adjustme	04	DIST 01 100
Occupancy	00	NONE 100
Quality	03	Quality Level 03
DOR CODE	0100	SINGLE FAMILY
MAP NUM		MKT AREA 05
NEIGHBORHOOD/LOC	5001.00	

AREA TYPE	TOTAL GROSS AREA	PCT OF BASE	TOT ADJ AREA	SUBAREA MARKET VALUE
BAS	1,490	100	1,490	127,284
BAS	208	100	208	17,769
FGR	592	55	326	27,848
FOP	58	30	17	1,452
FST	80	55	44	3,758
TOTALS	2,428		2,085	178,112

MARKET ADJUSTMENTS

TYPE	MDL	EFF. AREA	TOT ADJ PTS	EFF. BASE RATE	REPL. COST NEW	AYB	EYB	ECON	FNCT		NORM	% COND
0100	01	2,085	121.5200	115.44	240,692	1961	1991	0	0	0	26.00	74.00

1 SINGLE FAM – 100% - 0 Heated Area: 1698 HX Base Yr

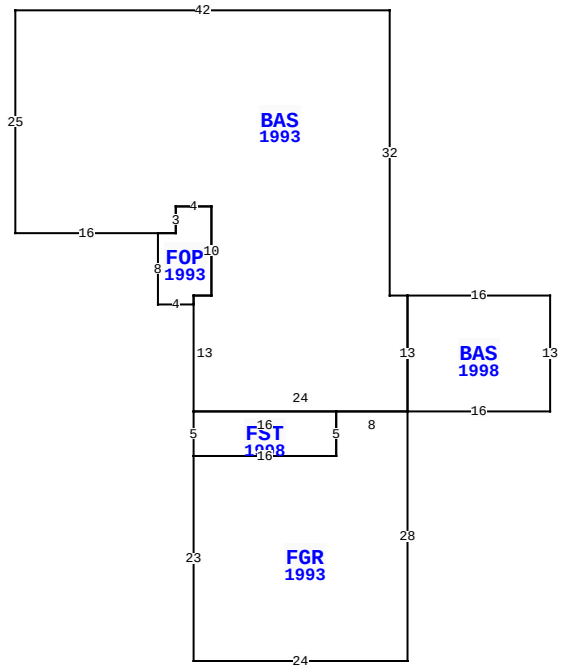

58230 TIMMONS RD, HILLIARD

BLD DATE		LGL DATE	
XF DATE		LAND DATE	
INC DATE		AG DATE	

NASSAU COUNTY PROPERTY

PAGE 1 of 2 4

VALUATION SUMMARY

VALUATION BY		STANDARD
Tax Group: 4	Tax Dist:	
BUILDING MARKET VALUE		183,582
TOTAL MARKET OB/XF VALUE		14,609
TOTAL LAND VALUE - MARKET		4,200
TOTAL MARKET VALUE		202,391
SOH/AGL Deduction		99,493
ASSESSED VALUE		102,898
TOTAL EXEMPTION VALUE	HX HB WX	55,000
BASE TAXABLE VALUE		47,898
TOTAL JUST VALUE		202,391
NCON VALUE		0
INCOME VALUE		
PREVIOUS YEAR MKT VALUE		195,046

PERMIT NUM	DESCRIPTION	AMT	ISSUED
B985196	REMODEL	17,500	07/01/1998

SALES DATA

OFF RECORD Number	DATE	TYPE INST	Q U /	V I /	RSN CD	SALE PRICE

BUILDING NOTES

BUILDING DIMENSIONS

BAS=[YR=1998] W16 BAS=[YR=1993] W2 N32 W42 S25 E16
FOP=[YR=1993] S8 E4 N1 E2 N10 W4 S3 W2 $ E2 N3 E4 S10 W2 S13
FST=[YR=1998] S5 FGR=[YR=1993] S23 E24 N28 W8 S5 W16 $ E16
N5 W16 $ E24 N13 $ S13 E16 N13 $.

EXTRA FEATURES

LN	OB/XF CODE	DESCRIPTION	BLD	CAP	L	W	UNITS	UT	Adj R	ADJ UNIT PRICE	ORIG COND	YEAR ON	YEAR ACTUAL	Q	% COND	OB/XF MKT VALUE	NOTES
1	0810	CONCRETE A	0	100	0	0	2,364.00	SF	6.50	6.50	100	1995	1995	3	70	10,756	
2	0810	CONCRETE A	0	100	0	0	812.00	SF	6.50	6.50	100	1997	1997	3	73	3,853	

LAND DESCRIPTION

TOTAL OB/XF 14,609

LN	USE CODE	CLS	LAND USE DESCRIPTION	CAP	RD	LOC ZONE	FRONT	DEPTH	TOT LND UTS	UNIT TYPE	DT	DPTH FACT	% COND	TOT ADJ	UNIT PRICE	ADJ UNIT PRICE	LAND VALUE	OTHER ADJUSTMENTS AND NOTES	YEAR	DENSITY	DECL	FRZ	YR	CONSRV
1	000100	C	SFR	100	0005	OR	0.00	0.00	0.12	AC		1.00	1.00	1.00	35,000.00	35,000.00	4,200							

REVIEW DATE 05/12/2019 BY KBA Total Acres: 0.12 Total Land Value: 4,200 Market: 0 Agricultural: 0 Common: 4,200 PRINTED 08/06/2024 BY SYS

IN OR 85 PG 247

TIMMONS ANNA B
58230 TIMMONS ROAD
HILLIARD, FL 32046

2024

35-4N-25-0000-0008-0010

NASSAU COUNTY PROPERTY

BUILDING CHARACTERISTICS

ELEMENT	CD	CONSTRUCTION
Exterior Wall	05	AVERAGE 100
Roof Structur	03	GABLE/HIP 100
Roof Cover	01	MINIMUM 100
Interior Wall	02	WALL BD/WD 100
Interior Floo	03	CONC FINSH 100
Air Condition	01	NONE 100
Heating Type	01	NONE 100
Bedrooms		0 100
Bathrooms		0 100
Frame	02	WOOD FRAME 100
Stories	1.	1. 100
Units		0 100
Occupancy	00	NONE 100
Quality	03	Quality Level 03

DOR CODE 0100 SINGLE FAMILY

MAP NUM | MKT AREA 05

NEIGHBORHOOD/LOC 5001.00

AREA TYPE	TOTAL GROSS AREA	PCT OF BASE	TOT ADJ AREA	SUBAREA MARKET VALUE
BAS	204	100	204	2,514
BAS	180	100	180	2,218
FCP	108	25	27	333
FCP	132	25	33	407
TOTALS	624		444	5,470

MARKET ADJUSTMENTS

TYPE	MDL	EFF. AREA	TOT ADJ PTS	EFF. BASE RATE	REPL. COST NEW	AYB	EYB	ECON	FNCT		NORM	% COND
6500	01	444	70.4000	24.64	10,940	1969	1989	0	0	0	50.00	50.00

2 GARAGE RES – 100% - 0 Heated Area: 384 HX Base Yr

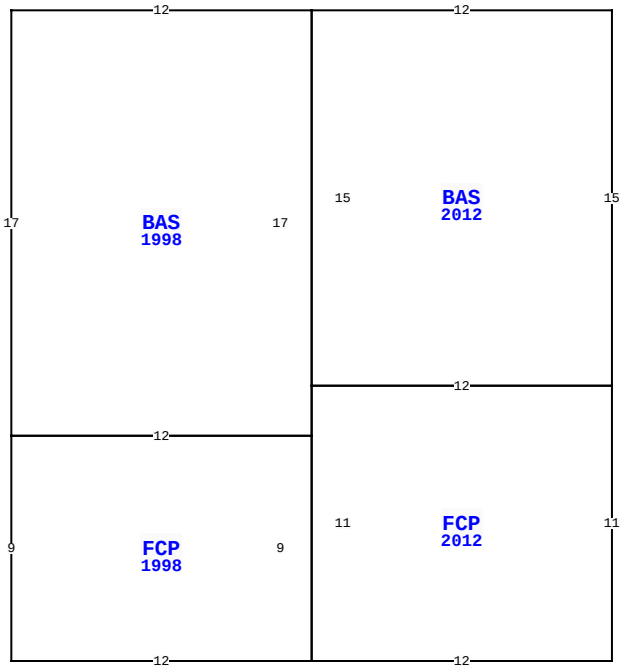

58230 TIMMONS RD, HILLIARD

BLD DATE		LGL DATE	
XF DATE		LAND DATE	
INC DATE		AG DATE	

NASSAU COUNTY PROPERTY — VALUATION SUMMARY

VALUATION BY		STANDARD
Tax Group: 4	Tax Dist:	
BUILDING MARKET VALUE		183,582
TOTAL MARKET OB/XF VALUE		14,609
TOTAL LAND VALUE - MARKET		4,200
TOTAL MARKET VALUE		202,391
SOH/AGL Deduction		99,493
ASSESSED VALUE		102,898
TOTAL EXEMPTION VALUE	HX HB WX	55,000
BASE TAXABLE VALUE		47,898
TOTAL JUST VALUE		202,391
NCON VALUE		0
INCOME VALUE		
PREVIOUS YEAR MKT VALUE		195,046

PERMIT NUM	DESCRIPTION	AMT	ISSUED

SALES DATA

OFF RECORD Number	DATE	TYPE INST	Q / U	V / I	RSN CD	SALE PRICE

BUILDING NOTES

BUILDING DIMENSIONS

BAS=[YR=2012] W12 BAS=[YR=1998] W12 S17 FCP=[YR=1998] S9 E12 FCP=[YR=2012] E12 N11 W12 S11$ N9 W12$ E12 N17$ S15 E12 N15$.

EXTRA FEATURES

L N	OB/XF CODE	DESCRIPTION	BLD	CAP	L	W	UNITS	UT	Adj R	ADJ UNIT PRICE	ORIG COND	YEAR ON	YEAR ACTUAL	Q	% COND	OB/XF MKT VALUE	NOTES

LAND DESCRIPTION

TOTAL OB/XF 0

L N	USE CODE	CLS	LAND USE DESCRIPTION	CAP	R D	LOC ZONE	FRONT	DEPTH	TOT LND UTS	UNIT TYPE	D T	DPTH FACT	% COND	TOT ADJ	UNIT PRICE	ADJ UNIT PRICE	LAND VALUE	OTHER ADJUSTMENTS AND NOTES	YEAR	DENSITY	DECL	FRZ	YR	CONSRV

REVIEW DATE 05/12/2019 BY KBA Total Acres: 0.12 Total Land Value: 4,200 Market: 0 Agricultural: 0 Common: 4,200 PRINTED 08/06/2024 BY SYS