LOTS 1 & 2
ANDY'S ACRES PBK 8/312
ESMT OR 2329/351 & OR 2329/349

BROUSSARD TERRY
17667 ANDREWS RD
HILLIARD, FL 32046

2024

35-4N-23-2021-0001-0000

BUILDING CHARACTERISTICS

ELEMENT	CD	CONSTRUCTION
Exterior Wall	25	MOD METAL 100
Roof Structur	03	GABLE/HIP 100
Roof Cover	12	MODULAR MT 100
Interior Wall	07	NONE 60
Interior Wall	05	DRYWALL 40
Interior Floo	03	CONC FINSH 100
Air Condition	99	N/A 100
Heating Type		N/A 100
Bedrooms		2 100
Bathrooms		1.5 100
Frame	05	STEEL 100
Stories	0	0 100
Units		0 100
Occupancy	00	NONE 100
Quality	03	Quality Level 03

DOR CODE	0100	SINGLE FAMILY	
MAP NUM		MKT AREA	09
NEIGHBORHOOD/LOC	9012.00		

AREA TYPE	TOTAL GROSS AREA	PCT OF BASE	TOT ADJ AREA	SUBAREA MARKET VALUE
BAS	1,211	100	1,211	76,056
FST	96	55	53	3,328
UGR	1,885	45	848	53,258
TOTALS	3,192		2,112	132,642

MARKET ADJUSTMENTS

TYPE	MDL	EFF. AREA	TOT ADJ PTS	EFF. BASE RATE	REPL. COST NEW	AYB	EYB	ECON	FNCT		NORM	% COND
0100	01	2,112	66.4440	63.12	133,309	2022	2022	0	0	0	0.50	99.50

1 SINGLE FAM – 100% - 2023 Heated Area: 1211 HX Base Yr 2023

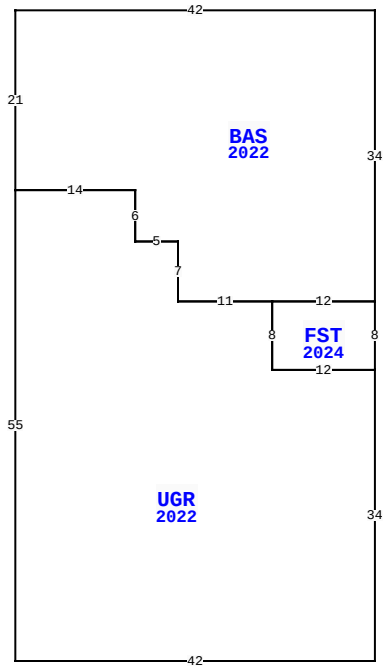

17667 ANDREWS RD, HILLIARD

BLD DATE		LGL DATE	
XF DATE		LAND DATE	06/13/2023 MLU
INC DATE		AG DATE	

NASSAU COUNTY PROPERTY

PAGE 1 of 1 4

VALUATION SUMMARY

VALUATION BY		STANDARD
Tax Group: 4	Tax Dist:	
BUILDING MARKET VALUE		132,642
TOTAL MARKET OB/XF VALUE		0
TOTAL LAND VALUE - MARKET		87,000
TOTAL MARKET VALUE		219,642
SOH/AGL Deduction		0
ASSESSED VALUE		219,642
TOTAL EXEMPTION VALUE	SX HX HB	100,000
BASE TAXABLE VALUE		119,642
TOTAL JUST VALUE		219,642
NCON VALUE		0
INCOME VALUE		
PREVIOUS YEAR MKT VALUE		216,235

PERMIT NUM	DESCRIPTION	AMT	ISSUED
22003717	CO ISSUED	0	03/09/2022
21011179	NEW CONSTR	206,584	08/24/2021

SALES DATA

OFF RECORD Number	DATE	TYPE INST	Q / U	V / I	RSN CD	SALE PRICE
2437/0145	2/24/2021	WD	Q	V	01	60,000

GRANTOR: JKS LAND LLC
GRANTEE: BROUSSARD TERRY

BUILDING NOTES

BUILDING DIMENSIONS

UGR=[YR=2022;ORIG=-93,21] S55 E42 N34 W12 N8 W11 N7 W5 N6 W14 $
BAS=[YR=2022;ORIG=-51,0] W42 S21 E14 S6 E5 S7 E11 E12 N34 $
FST=[YR=2024;ORIG=-63,34] E12 S8 W12 N8 $
.

EXTRA FEATURES

L N	OB/XF CODE	DESCRIPTION	BLD	CAP	L	W	UNITS	UT	Adj R	ADJ UNIT PRICE	ORIG COND	YEAR ON	YEAR ACTUAL	Q	% COND	OB/XF MKT VALUE	NOTES

LAND DESCRIPTION

TOTAL OB/XF 0

L N	USE CODE	CLS	LAND USE DESCRIPTION	CAP	R D	LOC ZONE	FRONT	DEPTH	TOT LND UTS	UNIT TYPE	D T	DPTH FACT	% COND	TOT ADJ	UNIT PRICE	ADJ UNIT PRICE	LAND VALUE	OTHER ADJUSTMENTS AND NOTES	YEAR	DENSITY	DECL	FRZ	YR	CONSRV
1	000115	C	SFR ACRES	100		OR	0.00	0.00	2.90	AC		1.00	1.00	1.00	30,000.00	30,000.00	87,000							

REVIEW DATE 05/03/2022 BY TW Total Acres: 2.90 Total Land Value: 87,000 Market: 0 Agricultural: 0 Common: 87,000 PRINTED 08/06/2024 BY SYS