LOTS 31 & 32
IN OR 1765/149
EX S-1 OF LOTS 31 & 32

BROWN DANA L
17625 ANDREWS RD
HILLIARD, FL 32046

2024

35-4N-23-2020-0031-0000

BUILDING CHARACTERISTICS

ELEMENT	CD	CONSTRUCTION
Exterior Wall	20	FACE BRICK 100
Roof Structur	03	GABLE/HIP 100
Roof Cover	12	MODULAR MT 100
Interior Wall	05	DRYWALL 100
Interior Floo	13	LVT/LAMNT 60
Interior Floo	14	CARPET 40
Air Condition	03	CENTRAL 100
Heating Type	04	AIR DUCTED 100
Bedrooms		4 100
Bathrooms		3 100
Frame	02	WOOD FRAME 100
Stories	2.	2. 100
Units		0 100
Occupancy	00	NONE 100
Quality	04	Quality Level 04
DOR CODE	0100	SINGLE FAMILY
MAP NUM		MKT AREA 09
NEIGHBORHOOD/LOC	9001.00	

AREA TYPE	TOTAL GROSS AREA	PCT OF BASE	TOT ADJ AREA	SUBAREA MARKET VALUE
BAS	1,494	100	1,494	180,367
FGR	624	55	343	41,409
FOP	408	30	122	14,729
FSP	200	40	80	9,658
FUS	104	100	104	12,556
FUS	260	100	260	31,389
FUS	560	100	560	67,607
TOTALS	3,650		2,963	357,715

MARKET ADJUSTMENTS

TYPE	MDL	EFF. AREA	TOT ADJ PTS	EFF. BASE RATE	REPL. COST NEW	AYB	EYB	ECON	FNCT		NORM	% COND
0900	01	2,963	109.7544	137.19	406,494	2007	2007	0	0	0	12.00	88.00

3 SNGL FAM – 100% - 2020 Heated Area: 2418 HX Base Yr

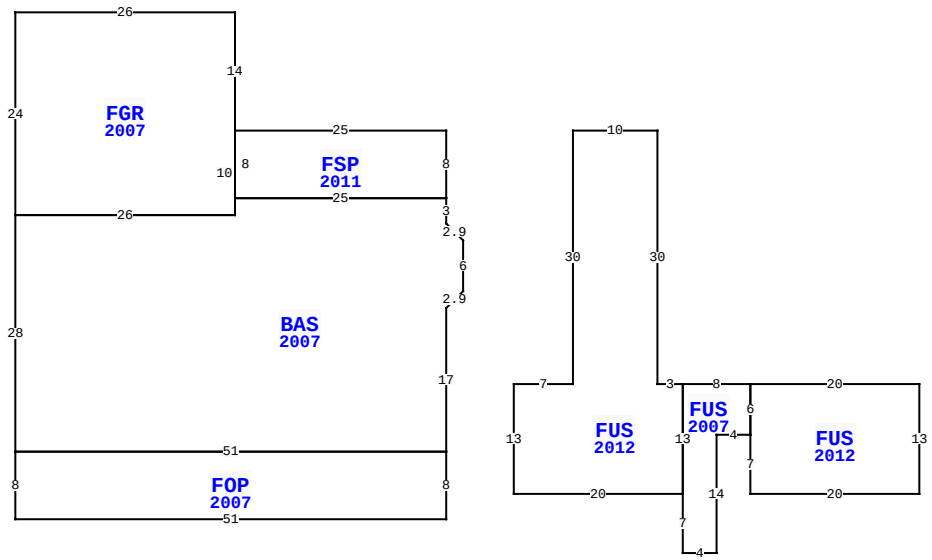

17625 ANDREWS RD, HILLIARD

BLD DATE		LGL DATE	
XF DATE		LAND DATE	06/16/2023 MLU
INC DATE		AG DATE	

NASSAU COUNTY PROPERTY

PAGE 1 of 1 4

VALUATION SUMMARY

VALUATION BY		STANDARD
Tax Group: 4	Tax Dist:	
BUILDING MARKET VALUE		357,715
TOTAL MARKET OB/XF VALUE		31,067
TOTAL LAND VALUE - MARKET		81,250
TOTAL MARKET VALUE		470,032
SOH/AGL Deduction		93,391
ASSESSED VALUE		376,641
TOTAL EXEMPTION VALUE	13	376,641
BASE TAXABLE VALUE		0
TOTAL JUST VALUE		470,032
NCON VALUE		7,874
INCOME VALUE		
PREVIOUS YEAR MKT VALUE		448,545

PERMIT NUM	DESCRIPTION	AMT	ISSUED
C18650	CO ISSUED	172,788	10/01/2006
B18650	NEW CONSTR	172,788	10/01/2006
E18171	ELEC OTHER	3,000	10/01/2006
M12125	MECH OTHER	0	10/01/2006
P11620	OTHER	0	10/01/2006
R09789	REPAIR/RRF	10,000	10/01/2006

SALES DATA

OFF RECORD Number	DATE	TYPE INST	Q / U	V / I	RSN CD	SALE PRICE
2436/0078	10/22/2020	QC	U	I	11	100
GRANTOR: BROWN STEVEN W & DANA						
GRANTEE: BROWN DANA L						
1765/0149	11/16/2011	WD	Q	I	01	210,000
GRANTOR: KICKLIGHTER PATRICIA						
GRANTEE: BROWN STEVEN W & DA						

BUILDING NOTES

BUILDING DIMENSIONS

FSP=[YR=2011] W25FGR=[YR=2007] N14W26S24 BAS=[YR=2007] S28FOP=[YR=2007] S8E51N8W51$ E51N17 R2 U2 N6 L2 U2 N3W25S2W26 $E26N10$S8E25N8$PTR=[YR=2007] E15 FUS=[YR=2012] S30W7S13E20FUS=[YR=2007] S7 E4N14E4FUS=[YR=2012] S7E20N13 W20S6$ N6W8S13$N13W3N30W10$W15$.

EXTRA FEATURES

LN	OB/XF CODE	DESCRIPTION	BLD	CAP	L	W	UNITS	UT	Adj R	ADJ UNIT PRICE	ORIG COND	YEAR ON	YEAR ACTUAL	Q	% COND	OB/XF MKT VALUE	NOTES
1	0510	GARAGE WD-	0	100	20	18	360.00	SF	29.75	29.75	100	2006	2006	3	44	4,712	
2	0812	CONCRETE C	0	100	0	0	1,104.00	SF	4.00	4.00	100	2007	2007	3	88	3,886	
4	0200	BARN WD 0-	0	100	48	11	528.00	SF	15.00	15.00	100	2011	2011	3	64	5,069	
5	0530	STBL WD	0	100	48	13	624.00	SF	22.50	22.50	100	2011	2011	3	64	8,986	
6	0680	POLE SHED	0	100	44	8	352.00	SF	10.00	10.00	100	2024	2021		95	3,344	
7	0351	CARPORT MT	0	100	20	10	200.00	SF	10.00	10.00	100	2024	2006		27	540	
8	0811	CONCRETE B	0	100	0	0	880.00	SF	5.20	5.20	100	2024	2021		99	4,530	

LAND DESCRIPTION

TOTAL OB/XF 31,067

LN	USE CODE	CLS	LAND USE DESCRIPTION	CAP	RD	LOC ZONE	FRONT	DEPTH	TOT LND UTS	UNIT TYPE	DT	DPTH FACT	% COND	TOT ADJ	UNIT PRICE	ADJ UNIT PRICE	LAND VALUE	OTHER ADJUSTMENTS AND NOTES	YEAR	DENSITY	DECL	FRZ	YR	CONSRV
1	000115	C	SFR ACRES	100	0006	OR	0.00	0.00	3.25	AC		1.00	1.00	1.00	25,000.00	25,000.00	81,250							

REVIEW DATE 03/21/2024 BY WWA Total Acres: 3.25 Total Land Value: 81,250 Market: 0 Agricultural: 0 Common: 81,250 PRINTED 08/06/2024 BY SYS