LOT 6
RESERVE AT DEER RUN #1 PB 8/24

DOWNS WILLIAM M JR & MAGGIE N
55206 BARTRAM TR
CALLAHAN, FL 32011

2024

35-3N-25-1810-0006-0000

NASSAU COUNTY PROPERTY

BUILDING CHARACTERISTICS

ELEMENT	CD	CONSTRUCTION
Exterior Wall	31	HARDIE BRD 100
Roof Structur	08	IRREGULAR 100
Roof Cover	03	COMP SHNGL 100
Interior Wall	05	DRYWALL 100
Interior Floo	13	LVT/LAMNT 70
Interior Floo	14	CARPET 30
Air Condition	03	CENTRAL 100
Heating Type	04	AIR DUCTED 100
Bedrooms		4 100
Bathrooms		3 100
Frame	02	WOOD FRAME 100
Stories	1.5	1.5 100
Units		0 100
Occupancy	00	NONE 100
Quality	02	Quality Level 02
DOR CODE	0100	SINGLE FAMILY
MAP NUM		MKT AREA 05
NEIGHBORHOOD/LOC	5012.00	

AREA TYPE	TOTAL GROSS AREA	PCT OF BASE	TOT ADJ AREA	SUBAREA MARKET VALUE
BAL	72	15	11	1,541
BAS	467	100	467	65,462
BAS	2,312	100	2,312	324,082
FGR	745	55	410	57,471
FOP	162	30	49	6,869
FOP	228	30	68	9,532
FST	48	55	26	3,644
FUS	288	100	288	40,370
PTO	72	5	4	560
STR	76	10	8	1,122
TOTALS	4,470		3,643	510,654

MARKET ADJUSTMENTS

TYPE	MDL	EFF. AREA	TOT ADJ PTS	EFF. BASE RATE	REPL. COST NEW	AYB	EYB	ECON	FNCT		NORM	% COND
0500	01	3,643	94.3920	141.59	515,812	2020	2020	0	0	0	1.00	99.00

1 SFR CUST – 0% - 0 Heated Area: 3067 HX Base Yr

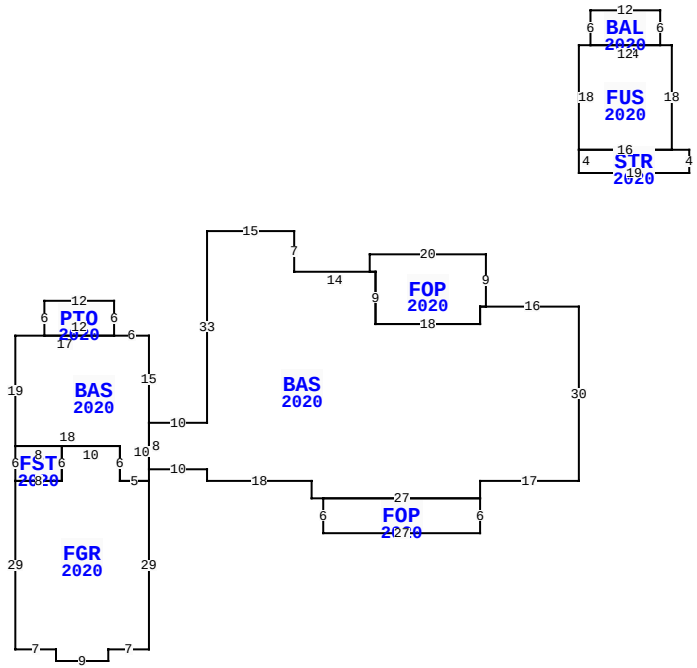

55206 BARTRAM TR, CALLAHAN

BLD DATE		LGL DATE	
XF DATE		LAND DATE	
INC DATE		AG DATE	

VALUATION SUMMARY

VALUATION BY	STANDARD
Tax Group: 4	Tax Dist:
BUILDING MARKET VALUE	510,654
TOTAL MARKET OB/XF VALUE	9,076
TOTAL LAND VALUE - MARKET	62,500
TOTAL MARKET VALUE	582,230
SOH/AGL Deduction	56,112
ASSESSED VALUE	526,118
TOTAL EXEMPTION VALUE	0
BASE TAXABLE VALUE	526,118
TOTAL JUST VALUE	582,230
NCON VALUE	0
INCOME VALUE	
PREVIOUS YEAR MKT VALUE	520,650

PERMIT NUM	DESCRIPTION	AMT	ISSUED
19012936	CO ISSUED	0	10/07/2020
19012936	NEW CONSTR	410,486	12/20/2019

SALES DATA

OFF RECORD Number	DATE	TYPE INST	Q / U	V / I	RSN CD	SALE PRICE
2276/1035	5/23/2019	WD	Q	V	02	65,000
GRANTOR: RIVERA YLATSIA						
GRANTEE: DOWNS WILLIAM M JR						
2217/1142	8/13/2018	WD	Q	V	01	52,500
GRANTOR: TAYLOR JAMES V						
GRANTEE: RIVERA YLATSIA						

BUILDING NOTES

BUILDING DIMENSIONS

BAS=[YR=2020] W16 FOP=[YR=2020] N9 W20 S3 E1 S9 E18 N3 E1$ W1 S3 W18 N9 W14 N7 W15 S33 W10 BAS=[YR=2020] N15 W6 PTO=[YR=2020] N6 W12 S6 E12$ W17 S19FST=[YR=2020] S6 FGR=[YR=2020] S29 E7 S2 E9 N2 E7 N29 W5 N6 W10 S6 W8$ E8 N6 W8$ E18 S6 E5 N10$ S8 E10 S2 E18 S3 E2 FOP=[YR=2020] S6 E27 N6 W27$E27 N3 E17 N30$ PTR=N45 FUS=[YR=2020] E2 BAL=[YR=2020] N6 E12 S6 W12$ E14 S18 STR=[YR=2020] E3 S4 W19N4 E16$ W16 N18$S45$.

EXTRA FEATURES

LN	OB/XF CODE	DESCRIPTION	BLD	CAP	L	W	UNITS	UT	Adj R	ADJ UNIT PRICE	ORIG COND	YEAR ON	YEAR ACTUAL	Q	% COND	OB/XF MKT VALUE	NOTES
1	0811	CONCRETE B	0	0	0	0	1,763.00	SF	5.20	5.20	100	2020	2020	3	99	9,076	

LAND DESCRIPTION

TOTAL OB/XF 9,076

LN	USE CODE	CLS	LAND USE DESCRIPTION	CAP	RD	LOC ZONE	FRONT	DEPTH	TOT LND UTS	UNIT TYPE	DT	DPTH FACT	% COND	TOT ADJ	UNIT PRICE	ADJ UNIT PRICE	LAND VALUE	OTHER ADJUSTMENTS AND NOTES	YEAR	DENSITY	DECL	FRZ	YR	CONSRV
1	000134	C	SFR POND	0		OR	0.00	0.00	1.00	LT		1.00	1.00	1.25	50,000.00	62,500.00	62,500							

REVIEW DATE 03/31/2021 BY KB Total Acres: 0.00 Total Land Value: 62,500 Market: 0 Agricultural: 0 Common: 62,500 PRINTED 08/06/2024 BY SYS