IN OR 221/376
ESMTS OR 399/338 & OR 554/172
EX 1-8 & R/W

NASSAU COUNTY SCHOOL BOARD/
(CALLAHAN INTERMEDIATE), 1201 ATLANTIC AVENUE
FERNANDINA BEACH, FL 32034

2024

35-2N-24-0000-0001-0010

BUILDING CHARACTERISTICS

ELEMENT	CD	CONSTRUCTION
Exterior Wall	19	COMMON BRK 100
Roof Structur	01	FLAT 100
Roof Cover	04	BUILT-UP 100
Interior Wall	01	MINIMUM 70
Interior Wall	08	DECORATIVE 30
Interior Floo	07	CORK/VTILE 70
Interior Floo	15	HARDTILE 30
Ceiling	01	FIN.SUSPD 100
Air Condition	06	ENG CENTRL 100
Heating Type	09	ENG F AIR 100
Fixtures		64 100
Frame	03	MASONRY 100
Story Height		12 100
RMS		45 100
Stories	1.	1. 100
Units		0 100
BUD8 Adjustme	06	DIST 1D 100
Occupancy	00	NONE 100
Quality	04	Quality Level 04
DOR CODE	8300	PUBLIC SCHOOLS
MAP NUM		MKT AREA 08
NEIGHBORHOOD/LOC	8001.00	

AREA TYPE	TOTAL GROSS AREA	PCT OF BASE	TOT ADJ AREA	SUBAREA MARKET VALUE
BAS	16,556	100	16,556	2,699,662
BAS	1,680	100	1,680	273,945
BAS	3,636	100	3,636	592,895
BAS	5,519	100	5,519	899,942
FOP	3,134	30	940	153,278
FOP	15	30	4	652
FOP	150	30	45	7,338
FOP	835	30	250	40,766
UOP	99	20	20	3,261
TOTALS	31,624		28,650	4,671,740

MARKET ADJUSTMENTS

TYPE	MDL	EFF. AREA	TOT ADJ PTS	EFF. BASE RATE	REPL. COST NEW	AYB	EYB	ECON	FNCT		NORM	% COND
7201	04	28,650	104.9180	205.11	5,876,402	1977	1999	0	0	0	20.50	79.50

1 SCHOOL – 0% - 0 Heated Area: 27391 HX Base Yr

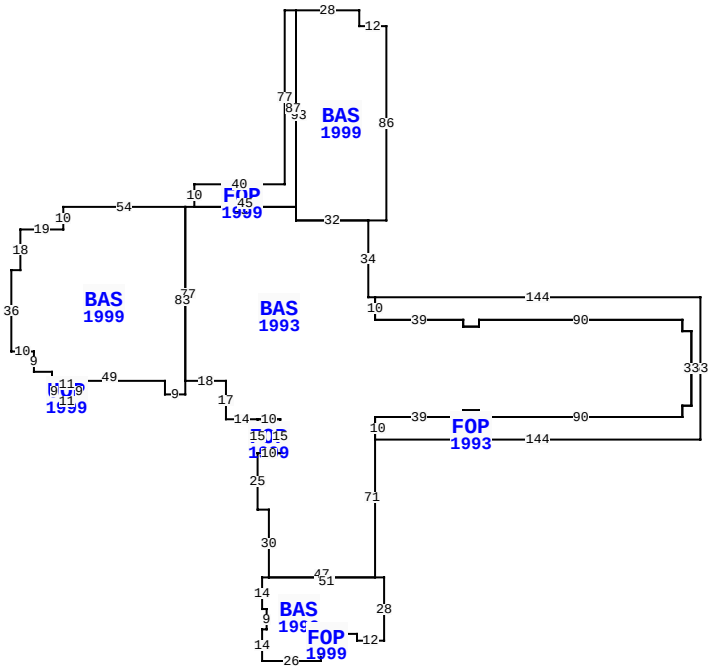

34586 BALLPARK RD, CALLAHAN

BLD DATE		LGL DATE	
XF DATE		LAND DATE	06/21/2024 TD
INC DATE		AG DATE	

NASSAU COUNTY PROPERTY

PAGE 1 of 9 6

VALUATION SUMMARY

VALUATION BY		STANDARD
Tax Group: 6	Tax Dist:	
BUILDING MARKET VALUE		14,262,264
TOTAL MARKET OB/XF VALUE		499,514
TOTAL LAND VALUE - MARKET		2,300,500
TOTAL MARKET VALUE		17,062,278
SOH/AGL Deduction		6,390,733
ASSESSED VALUE		10,671,545
TOTAL EXEMPTION VALUE	01	10,671,545
BASE TAXABLE VALUE		0
TOTAL JUST VALUE		17,062,278
NCON VALUE		0
INCOME VALUE		
PREVIOUS YEAR MKT VALUE		15,730,705

PERMIT NUM	DESCRIPTION	AMT	ISSUED

SALES DATA

OFF RECORD Number	DATE	TYPE INST	Q / U	V / I	RSN CD	SALE PRICE
0221/0376	1/01/1976	WD	Q	V		6,600

GRANTOR:

GRANTEE:

BUILDING NOTES

BUILDING DIMENSIONS

FOP=[YR=1993] W144 BAS=[YR=1993] W3 N34 BAS=[YR=1999] E8N86W12 N7W28 FOP=[YR=1999] W5S77W40S10E45 N87 $ S93E32$ W32 N6 W49 BAS=[YR=1999] W54 S10 W19S18W4 S36 E10 S9 E8S4E1 UOP=[YR=1999] S9 E11 N9W11 $ E49 S6 E9 N83 $ S77E18 S17 E14 FOP=[YR=1999] S15 E10 N15 W10 $ E10 S15W10 S25 E5 S30 BAS=[YR=1999] W3 S14 E2 S9 W2S14E26 N9 FOP=[YR=1999] E5 N3 W5 S3 $N3 E16 S3E12 N28 W51 $ E47N71E39 N3 E7 S3 E90 N5 E4 N33 W4 N5 W90 S3 W7 N3 W39 N10 $ S10 E39 S3 E7 N3 E90 S5 E4 S33W4 S5 W90 N3 W7 S3 W39 S10 E144 N63 $.

EXTRA FEATURES

L N	OB/XF CODE	DESCRIPTION	BLD	CAP	L	W	UNITS	UT	Adj R	ADJ UNIT PRICE	ORIG COND	YEAR ON	YEAR ACTUAL	Q	% COND	OB/XF MKT VALUE	NOTES
1	0505	FLAGPOLE A	0	0	0	0	30.00	LF	50.00	50.00	100	1985	1985	3	20	300	
2	1128	BRICK 12"	0	0	0	0	846.00	SF	14.00	14.00	100	1977	1977	3	69	8,172	
3	0430	CL FNC 6B	0	0	0	0	1,140.00	LF	9.70	9.70	100	1990	1990	3	27	2,986	
4	0466	FNC GT 20'	0	0	0	0	2.00	UT	750.00	750.00	100	1990	1990	3	27	405	
5	0463	FENCE GATE	0	0	0	0	7.00	UT	300.00	300.00	100	1990	1990	3	27	567	
6	0464	FNC GT 10'	0	0	0	0	1.00	UT	350.00	350.00	100	1999	1999	3	48	168	
7	0464	FNC GT 10'	0	0	0	0	1.00	UT	350.00	350.00	100	1999	1999	3	48	168	
8	0465	FNC GT 15'	0	0	0	0	1.00	UT	450.00	450.00	100	1999	1999	3	48	216	
9	0467	FNC GT 25'	0	0	0	0	1.00	UT	700.00	700.00	100	1999	1999	3	48	336	
10	0424	CL FNC 6'	0	0	0	0	4,114.00	LF	20.00	20.00	100	1999	1999	3	48	39,494	

TOTAL OB/XF 52,812

LAND DESCRIPTION

L N	USE CODE	CLS	LAND USE DESCRIPTION	CAP	R D	LOC ZONE	FRONT	DEPTH	TOT LND UTS	UNIT TYPE	D T	DPTH FACT	% COND	TOT ADJ	UNIT PRICE	ADJ UNIT PRICE	LAND VALUE	OTHER ADJUSTMENTS AND NOTES	YEAR	DENSITY	DECL	FRZ	YR	CONSRV
1	008300	C	SCHOOL	0		GPU	0.00	0.00	46.01	AC		1.00	1.00	1.00	50,000.00	50,000.00	2,300,500							

REVIEW DATE 02/01/2024 BY KBA Total Acres: 46.01 Total Land Value: 2,300,500 Market: 0 Agricultural: 0 Common: 2,300,500 PRINTED 08/06/2024 BY SYS

IN OR 221/376
ESMTS OR 399/338 & OR 554/172
EX 1-8 & R/W

NASSAU COUNTY SCHOOL BOARD/
(CALLAHAN INTERMEDIATE), 1201 ATLANTIC AVENUE
FERNANDINA BEACH, FL 32034

2024

35-2N-24-0000-0001-0010

NASSAU COUNTY PROPERTY

BUILDING CHARACTERISTICS

ELEMENT	CD	CONSTRUCTION
Exterior Wall	19	COMMON BRK 100
Roof Structur	01	FLAT 100
Roof Cover	04	BUILT-UP 100
Interior Wall	01	MINIMUM 100
Interior Floo	07	CORK/VTILE 100
Ceiling	01	FIN.SUSPD 100
Air Condition	06	ENG CENTRL 100
Heating Type	09	ENG F AIR 100
Fixtures		7 100
Frame	03	MASONRY 100
Story Height		9 100
RMS		24 100
Stories	1.	1. 100
Units		0 100
BUD8 Adjustme	06	DIST 1D 100
Occupancy	00	NONE 100
Quality	04	Quality Level 04
DOR CODE	8300	PUBLIC SCHOOLS
MAP NUM		MKT AREA 08
NEIGHBORHOOD/LOC	8001.00	

AREA TYPE	TOTAL GROSS AREA	PCT OF BASE	TOT ADJ AREA	SUBAREA MARKET VALUE
BAS	9,249	100	9,249	1,237,503
FOP	75	30	22	2,944
FOP	75	30	22	2,944
FOP	119	30	36	4,817
FOP	136	30	41	5,486
TOTALS	9,654		9,370	1,253,692

MARKET ADJUSTMENTS

TYPE	MDL	EFF. AREA	TOT ADJ PTS	EFF. BASE RATE	REPL. COST NEW	AYB	EYB	ECON	FNCT		NORM	% COND
7201	04	9,370	86.0854	168.30	1,576,971	1999	1999	0	0	0	20.50	79.50

2 SCHOOL – 0% - 0 Heated Area: 9249 HX Base Yr

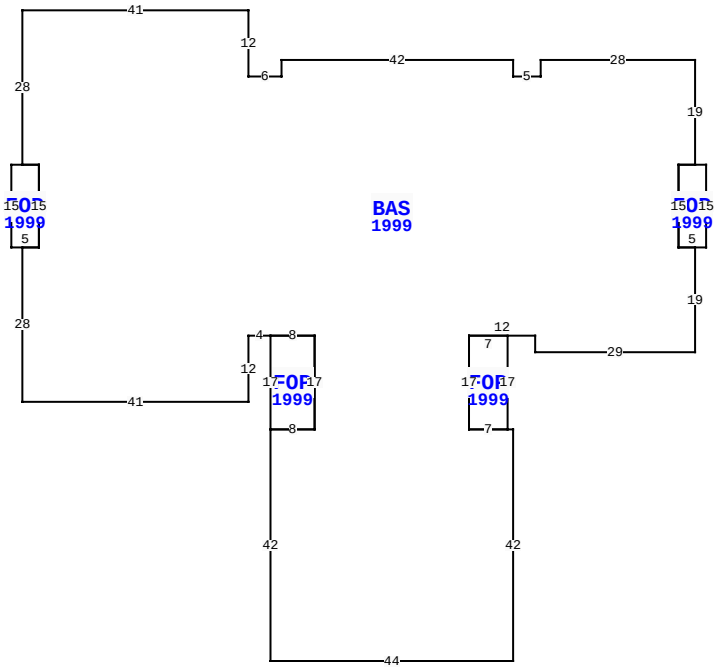

34586 BALLPARK RD, CALLAHAN

BLD DATE		LGL DATE	
XF DATE		LAND DATE	06/21/2024 TD
INC DATE		AG DATE	

VALUATION SUMMARY

VALUATION BY		STANDARD
Tax Group: 6	Tax Dist:	
BUILDING MARKET VALUE		14,262,264
TOTAL MARKET OB/XF VALUE		499,514
TOTAL LAND VALUE - MARKET		2,300,500
TOTAL MARKET VALUE		17,062,278
SOH/AGL Deduction		6,390,733
ASSESSED VALUE		10,671,545
TOTAL EXEMPTION VALUE	01	10,671,545
BASE TAXABLE VALUE		0
TOTAL JUST VALUE		17,062,278
NCON VALUE		0
INCOME VALUE		
PREVIOUS YEAR MKT VALUE		15,730,705

PERMIT NUM	DESCRIPTION	AMT	ISSUED

SALES DATA

OFF RECORD Number	DATE	TYPE INST	Q / U	V / I	RSN CD	SALE PRICE
0221/0376	1/01/1976	WD	Q	V		6,600

GRANTOR:

GRANTEE:

BUILDING NOTES

BUILDING DIMENSIONS

FOP=[YR=1999] W2 BAS=[YR=1999] N19 W28 S3 W5 N3 W42 S3 W6 N12 W41 S28 FOP=[YR=1999] W2 S15 E5 N15 W3$ E3 S15 W3 S28 E41N12 E4 FOP=[YR=1999] S17 E8 N17 W8 $ E8 S17 W8 S42 E44 N42 W1 FOP=[YR=1999] N17 W7 S17 E7 $ W7 N17 E12 S3 E29 N19 W3 N15E3 $ W3 S15 E5 N15 $.

EXTRA FEATURES

L N	OB/XF CODE	DESCRIPTION	BLD	CAP	L	W	UNITS	UT	Adj R	ADJ UNIT PRICE	ORIG COND	YEAR ON	YEAR ACTUAL	Q	% COND	OB/XF MKT VALUE	NOTES
11	0649	LIGHTS-GD	0	0	0	0	2.00	SF	225.00	225.00	100	1999	1999	3	20	90	
12	1128	BRICK 12"	0	0	0	0	2,800.00	SF	28.00	28.00	100	1999	1999	3	93	72,912	
13	0400	CONC CURB	0	0	0	0	2,278.00	LF	15.00	15.00	100	1999	1999	3	83	28,361	
14	0350	CARPORT WD	0	0	0	0	38,776.00	SF	26.00	26.00	100	1999	1999	3	20	201,635	
15	0972	ST LGHT UN	0	0	0	0	11.00	UT	2,530.00	2,530.00	100	1999	1999	3	48	13,358	
16	0975	ST LT/ARM	0	0	0	0	3.00	UT	500.00	500.00	100	1999	1999	3	48	720	
17	0402	CONC BUMPE	0	0	0	0	18.00	UT	25.00	25.00	100	1999	1999	3	83	374	
18	0812	CONCRETE C	0	0	0	0	12,983.00	SF	4.00	4.00	100	1999	1999	3	77	39,988	
19	0940	SHEDS/PORT	0	0	20	12	240.00	SF	19.50	19.50	100	1999	1999	3	20	936	
21	4950	BOLLARD	0	0	0	0	9.00	UT	100.00	100.00	100	1999	1999	3	100	900	

TOTAL OB/XF 359,274

LAND DESCRIPTION

L N	USE CODE	CLS	LAND USE DESCRIPTION	CAP	R D	LOC ZONE	FRONT	DEPTH	TOT LND UTS	UNIT TYPE	D T	DPTH FACT	% COND	TOT ADJ	UNIT PRICE	ADJ UNIT PRICE	LAND VALUE	OTHER ADJUSTMENTS AND NOTES	YEAR	DENSITY	DECL	FRZ	YR	CONSRV

REVIEW DATE 02/01/2024 BY KBA Total Acres: 46.01 Total Land Value: 2,300,500 Market: 0 Agricultural: 0 Common: 2,300,500 PRINTED 08/06/2024 BY SYS

IN OR 221/376
ESMTS OR 399/338 & OR 554/172
EX 1-8 & R/W

NASSAU COUNTY SCHOOL BOARD/
(CALLAHAN INTERMEDIATE), 1201 ATLANTIC AVENUE
FERNANDINA BEACH, FL 32034

2024

35-2N-24-0000-0001-0010

BUILDING CHARACTERISTICS

ELEMENT	CD	CONSTRUCTION
Exterior Wall	19	COMMON BRK 100
Roof Structur	01	FLAT 100
Roof Cover	04	BUILT-UP 100
Interior Wall	01	MINIMUM 100
Interior Floo	07	CORK/VTILE 100
Ceiling	01	FIN.SUSPD 100
Air Condition	06	ENG CENTRL 100
Heating Type	09	ENG F AIR 100
Fixtures		33 100
Frame	03	MASONRY 100
Story Height		9 100
RMS		35 100
Stories	1.	1. 100
Units		0 100
BUD8 Adjustme	06	DIST 1D 100
Occupancy	00	NONE 100
Quality	04	Quality Level 04
DOR CODE	8300	PUBLIC SCHOOLS
MAP NUM		MKT AREA 08
NEIGHBORHOOD/LOC	8001.00	

AREA TYPE	TOTAL GROSS AREA	PCT OF BASE	TOT ADJ AREA	SUBAREA MARKET VALUE
BAS	12,634	100	12,634	1,771,767
FOP	48	30	14	1,964
FOP	54	30	16	2,243
FOP	75	30	22	3,085
FOP	75	30	22	3,085
FOP	75	30	22	3,085
FOP	90	30	27	3,787
FOP	90	30	27	3,787
FOP	90	30	27	3,787
FOP	95	30	28	3,927
TOTALS	13,326		12,839	1,800,516

MARKET ADJUSTMENTS

TYPE	MDL	EFF. AREA	TOT ADJ PTS	EFF. BASE RATE	REPL. COST NEW	AYB	EYB	ECON	FNCT		NORM	% COND
7201	04	12,839	90.2286	176.40	2,264,800	1999	1999	0	0	0	20.50	79.50

3 SCHOOL – 0% - 0 Heated Area: 12634 HX Base Yr

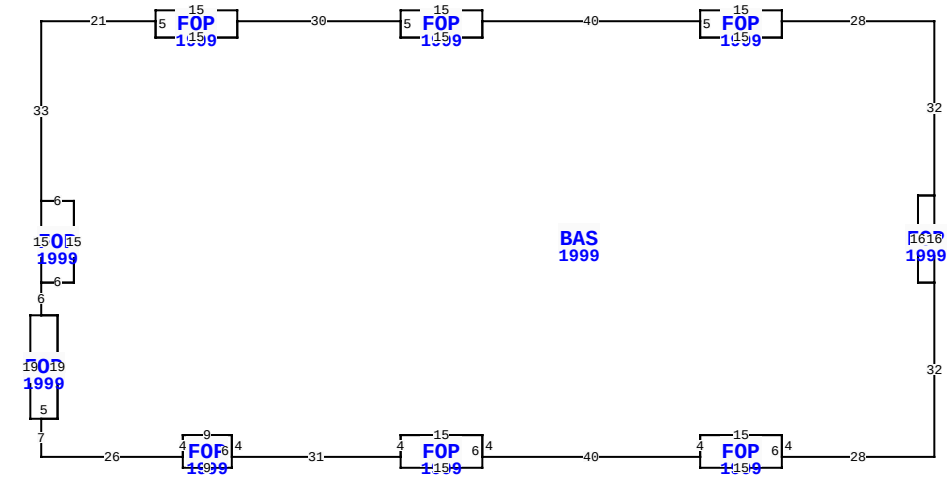

34586 BALLPARK RD, CALLAHAN

BLD DATE		LGL DATE	
XF DATE		LAND DATE	06/21/2024 TD
INC DATE		AG DATE	

NASSAU COUNTY PROPERTY

PAGE 3 of 9 6

VALUATION SUMMARY

VALUATION BY		STANDARD
Tax Group: 6	Tax Dist:	
BUILDING MARKET VALUE		14,262,264
TOTAL MARKET OB/XF VALUE		499,514
TOTAL LAND VALUE - MARKET		2,300,500
TOTAL MARKET VALUE		17,062,278
SOH/AGL Deduction		6,390,733
ASSESSED VALUE		10,671,545
TOTAL EXEMPTION VALUE	01	10,671,545
BASE TAXABLE VALUE		0
TOTAL JUST VALUE		17,062,278
NCON VALUE		0
INCOME VALUE		
PREVIOUS YEAR MKT VALUE		15,730,705

PERMIT NUM	DESCRIPTION	AMT	ISSUED

SALES DATA

OFF RECORD Number	DATE	TYPE INST	Q / U	V / I	RSN CD	SALE PRICE
0221/0376	1/01/1976	WD	Q	V		6,600

GRANTOR:

GRANTEE:

BUILDING NOTES

BUILDING DIMENSIONS

BAS=[YR=1999] W28 FOP=[YR=1999] N2 W15 S5 E15 N3 $ S3W15 N3 W40 FOP=[YR=1999] N2 W15 S5 E15 N3 $ S3 W15 N3 W30 FOP=[YR=1999] N2W15S5 E15 N3$ S3 W15 N3 W21 S33 FOP=[YR=1999] S15 E6 N15 W6 $ E6 S15 W6 S6 FOP=[YR=1999] W2 S19 E5 N19 W3 $ E3 S19 W3 S7 E26 FOP=[YR=1999] S2 E9 N6 W9 S4 $ N4 E9 S4 E31 FOP=[YR=1999] S2 E15 N6 W15 S4 $ N4 E15 S4 E40 FOP=[YR=1999] S2 E15 N6 W15 S4$ N4 E15 S4 E28 N32 FOP=[YR=1999] N16 W3 S16 E3 $ W3 N16 E3 N32$.

EXTRA FEATURES

LN	OB/XF CODE	DESCRIPTION	BLD	CAP	L	W	UNITS	UT	Adj R	ADJ UNIT PRICE	ORIG COND	YEAR ON	YEAR ACTUAL	Q	% COND	OB/XF MKT VALUE	NOTES
22	0803	ASPHALT C	0	0	0	0	76,427.00	SF	2.00	2.00	100	1999	1999	3	50	76,427	
23	0810	CONCRETE A	0	0	0	0	165.00	SF	6.50	6.50	100	2008	2008	3	89	955	
24	0350	CARPORT WD	0	0	0	0	1,104.00	SF	26.00	26.00	100	2008	2008	3	35	10,046	

LAND DESCRIPTION

TOTAL OB/XF 87,428

LN	USE CODE	CLS	LAND USE DESCRIPTION	CAP	RD	LOC ZONE	FRONT	DEPTH	TOT LND UTS	UNIT TYPE	DT	DPTH FACT	% COND	TOT ADJ	UNIT PRICE	ADJ UNIT PRICE	LAND VALUE	OTHER ADJUSTMENTS AND NOTES	YEAR	DENSITY	DECL	FRZ	YR	CONSRV

REVIEW DATE 02/01/2024 BY KBA Total Acres: 46.01 Total Land Value: 2,300,500 Market: 0 Agricultural: 0 Common: 2,300,500 PRINTED 08/06/2024 BY SYS

IN OR 221/376
ESMTS OR 399/338 & OR 554/172
EX 1-8 & R/W

NASSAU COUNTY SCHOOL BOARD/
(CALLAHAN INTERMEDIATE), 1201 ATLANTIC AVENUE
FERNANDINA BEACH, FL 32034

2024

35-2N-24-0000-0001-0010

BUILDING CHARACTERISTICS

ELEMENT	CD	CONSTRUCTION
Exterior Wall	19	COMMON BRK 100
Roof Structur	01	FLAT 100
Roof Cover	04	BUILT-UP 100
Interior Wall	01	MINIMUM 100
Interior Floo	07	CORK/VTILE 100
Ceiling	01	FIN.SUSPD 100
Air Condition	06	ENG CENTRL 100
Heating Type	09	ENG F AIR 100
Fixtures		29 100
Frame	03	MASONRY 100
Story Height		9 100
RMS		29 100
Stories	1.	1. 100
Units		0 100
BUD8 Adjustme	06	DIST 1D 100
Occupancy	00	NONE 100
Quality	04	Quality Level 04
DOR CODE	8300	PUBLIC SCHOOLS
MAP NUM		MKT AREA 08
NEIGHBORHOOD/LOC	8001.00	

AREA TYPE	TOTAL GROSS AREA	PCT OF BASE	TOT ADJ AREA	SUBAREA MARKET VALUE
BAS	11,682	100	11,682	1,620,057
FOP	36	30	11	1,526
FOP	75	30	22	3,051
FOP	75	30	22	3,051
FOP	75	30	22	3,051
FOP	75	30	22	3,051
TOTALS	12,018		11,781	1,633,787

MARKET ADJUSTMENTS

TYPE	MDL	EFF. AREA	TOT ADJ PTS	EFF. BASE RATE	REPL. COST NEW	AYB	EYB	ECON	FNCT		NORM	% COND
7201	04	11,781	89.2261	174.44	2,055,078	1999	1999	0	0	0	20.50	79.50

4 SCHOOL – 0% - 0 Heated Area: 11682 HX Base Yr

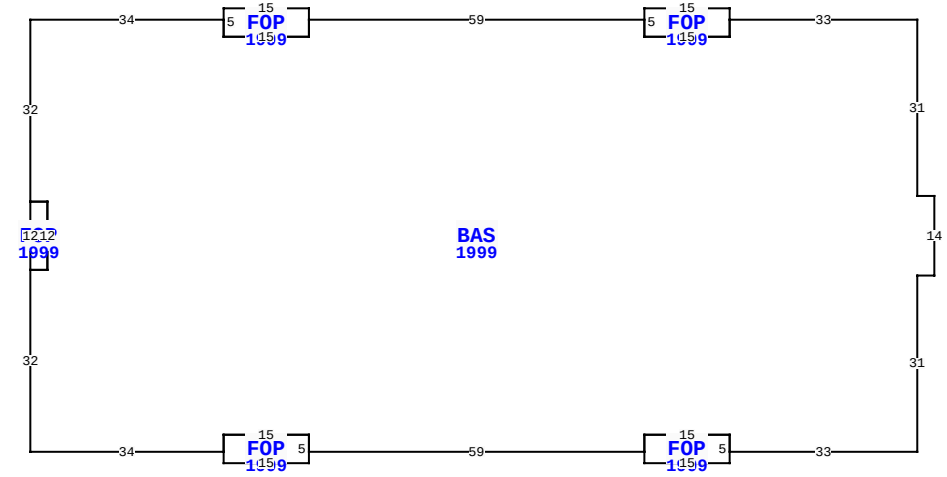

34586 BALLPARK RD, CALLAHAN

BLD DATE		LGL DATE	
XF DATE		LAND DATE	06/21/2024 TD
INC DATE		AG DATE	

NASSAU COUNTY PROPERTY

PAGE 4 of 9 6

VALUATION SUMMARY

VALUATION BY		STANDARD
Tax Group: 6	Tax Dist:	
BUILDING MARKET VALUE		14,262,264
TOTAL MARKET OB/XF VALUE		499,514
TOTAL LAND VALUE - MARKET		2,300,500
TOTAL MARKET VALUE		17,062,278
SOH/AGL Deduction		6,390,733
ASSESSED VALUE		10,671,545
TOTAL EXEMPTION VALUE	01	10,671,545
BASE TAXABLE VALUE		0
TOTAL JUST VALUE		17,062,278
NCON VALUE		0
INCOME VALUE		
PREVIOUS YEAR MKT VALUE		15,730,705

PERMIT NUM	DESCRIPTION	AMT	ISSUED

SALES DATA

OFF RECORD Number	DATE	TYPE INST	Q / U	V / I	RSN CD	SALE PRICE
0221/0376	1/01/1976	WD	Q	V		6,600

GRANTOR:

GRANTEE:

BUILDING NOTES

BUILDING DIMENSIONS

BAS=[YR=1999] W33 FOP=[YR=1999] N2 W15 S5 E15 N3 $ S3 W15 N3 W59 FOP=[YR=1999] N2 W15 S5 E15 N3$ S3 W15 N3 W34 S32 FOP=[YR=1999] S12 E3 N12W3 $ E3 S12 W3 S32 E34 FOP=[YR=1999] S2 E15 N5 W15 S3$ N3 E15 S3 E59 FOP=[YR=1999] S2 E15 N5 W15 S3$ N3 E15 S3 E33 N31 E3 N14 W3 N31 $.

EXTRA FEATURES

L N	OB/XF CODE	DESCRIPTION	BLD	CAP	L	W	UNITS	UT	Adj R	ADJ UNIT PRICE	ORIG COND	YEAR ON	YEAR ACTUAL	Q	% COND	OB/XF MKT VALUE	NOTES

LAND DESCRIPTION

TOTAL OB/XF 0

L N	USE CODE	CLS	LAND USE DESCRIPTION	CAP	R D	LOC ZONE	FRONT	DEPTH	TOT LND UTS	UNIT TYPE	D T	DPTH FACT	% COND	TOT ADJ	UNIT PRICE	ADJ UNIT PRICE	LAND VALUE	OTHER ADJUSTMENTS AND NOTES	YEAR	DENSITY	DECL	FRZ	YR	CONSRV

REVIEW DATE 02/01/2024 BY KBA Total Acres: 46.01 Total Land Value: 2,300,500 Market: 0 Agricultural: 0 Common: 2,300,500 PRINTED 08/06/2024 BY SYS

IN OR 221/376
ESMTS OR 399/338 & OR 554/172
EX 1-8 & R/W

NASSAU COUNTY SCHOOL BOARD/
(CALLAHAN INTERMEDIATE), 1201 ATLANTIC AVENUE
FERNANDINA BEACH, FL 32034

2024

35-2N-24-0000-0001-0010

BUILDING CHARACTERISTICS

ELEMENT	CD	CONSTRUCTION
Exterior Wall	19	COMMON BRK 100
Roof Structur	01	FLAT 100
Roof Cover	04	BUILT-UP 100
Interior Wall	01	MINIMUM 100
Interior Floo	07	CORK/VTILE 100
Ceiling	01	FIN.SUSPD 100
Air Condition	06	ENG CENTRL 100
Heating Type	09	ENG F AIR 100
Fixtures		27 100
Frame	03	MASONRY 100
Story Height		9 100
RMS		35 100
Stories	1.	1. 100
Units		0 100
BUD8 Adjustme	06	DIST 1D 100
Occupancy	00	NONE 100
Quality	04	Quality Level 04
DOR CODE	8300	PUBLIC SCHOOLS
MAP NUM		MKT AREA 08
NEIGHBORHOOD/LOC	8001.00	

AREA TYPE	TOTAL GROSS AREA	PCT OF BASE	TOT ADJ AREA	SUBAREA MARKET VALUE
BAS	11,865	100	11,865	1,645,436
FOP	36	30	11	1,526
FOP	75	30	22	3,051
FOP	75	30	22	3,051
FOP	75	30	22	3,051
FOP	75	30	22	3,051
FOP	75	30	22	3,051
TOTALS	12,276		11,986	1,662,216

MARKET ADJUSTMENTS

TYPE	MDL	EFF. AREA	TOT ADJ PTS	EFF. BASE RATE	REPL. COST NEW	AYB	EYB	ECON	FNCT		NORM	% COND
7201	04	11,986	89.2261	174.44	2,090,838	1999	1999	0	0	0	20.50	79.50

5 SCHOOL – 0% - 0 Heated Area: 11865 HX Base Yr

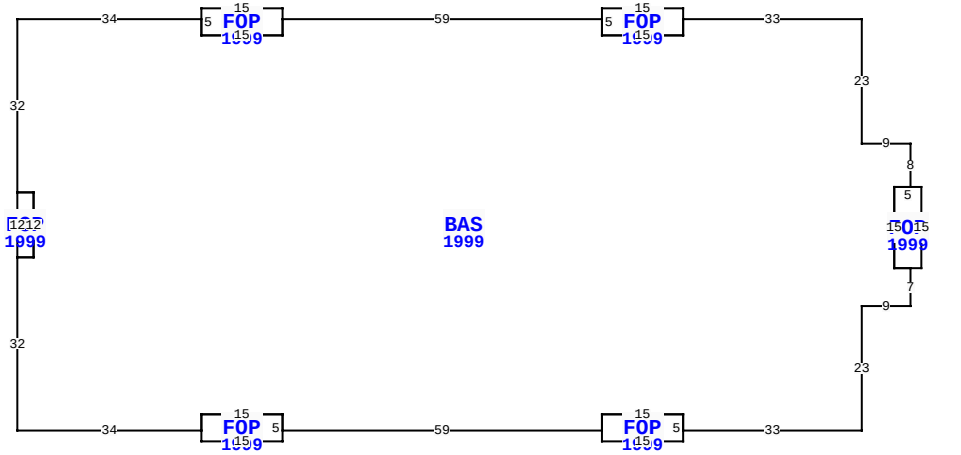

34586 BALLPARK RD, CALLAHAN

BLD DATE		LGL DATE	
XF DATE		LAND DATE	06/21/2024 TD
INC DATE		AG DATE	

EXTRA FEATURES

L N	OB/XF CODE	DESCRIPTION	BLD	CAP	L	W	UNITS	UT	Adj R	ADJ UNIT PRICE	ORIG COND	YEAR ON	YEAR ACTUAL	Q	% COND	OB/XF MKT VALUE	NOTES

NASSAU COUNTY PROPERTY

PAGE 5 of 9 6

VALUATION SUMMARY

VALUATION BY		STANDARD
Tax Group: 6	Tax Dist:	
BUILDING MARKET VALUE		14,262,264
TOTAL MARKET OB/XF VALUE		499,514
TOTAL LAND VALUE - MARKET		2,300,500
TOTAL MARKET VALUE		17,062,278
SOH/AGL Deduction		6,390,733
ASSESSED VALUE		10,671,545
TOTAL EXEMPTION VALUE	01	10,671,545
BASE TAXABLE VALUE		0
TOTAL JUST VALUE		17,062,278
NCON VALUE		0
INCOME VALUE		
PREVIOUS YEAR MKT VALUE		15,730,705

PERMIT NUM	DESCRIPTION	AMT	ISSUED

SALES DATA

OFF RECORD Number	DATE	TYPE INST	Q U /	V I /	RSN CD	SALE PRICE
0221/0376	1/01/1976	WD	Q	V		6,600

GRANTOR:

GRANTEE:

BUILDING NOTES

BUILDING DIMENSIONS

BAS=[YR=1999] W9 N23 W33 FOP=[YR=1999] N2W15 S5 E15 N3$ S3 W15 N3 W59 FOP=[YR=1999] N2 W15 S5 E15 N3$ S3 W15 N3 W34 S32 FOP=[YR=1999] S12E3 N12 W3 $ E3 S12 W3 S32 E34 FOP=[YR=1999] S2 E15 N5 W15 S3$ N3 E15 S3 E59 FOP=[YR=1999] S2 E15 N5 W15 S3$ N3 E15 S3 E33 N23 E9 N7 FOP=[YR=1999] E2 N15 W5 S15 E3 $ W3 N15 E3 N8 $.

LAND DESCRIPTION

TOTAL OB/XF 0

L N	USE CODE	CLS	LAND USE DESCRIPTION	CAP	R D	LOC ZONE	FRONT	DEPTH	TOT LND UTS	UNIT TYPE	D T	DPTH FACT	% COND	TOT ADJ	UNIT PRICE	ADJ UNIT PRICE	LAND VALUE	OTHER ADJUSTMENTS AND NOTES	YEAR	DENSITY	DECL	FRZ	YR	CONSRV

REVIEW DATE 02/01/2024 BY KBA Total Acres: 46.01 Total Land Value: 2,300,500 Market: 0 Agricultural: 0 Common: 2,300,500 PRINTED 08/06/2024 BY SYS

IN OR 221/376
ESMTS OR 399/338 & OR 554/172
EX 1-8 & R/W

NASSAU COUNTY SCHOOL BOARD/
(CALLAHAN INTERMEDIATE), 1201 ATLANTIC AVENUE
FERNANDINA BEACH, FL 32034

2024

35-2N-24-0000-0001-0010

BUILDING CHARACTERISTICS

ELEMENT	CD	CONSTRUCTION
Exterior Wall	19	COMMON BRK 100
Roof Structur	01	FLAT 100
Roof Cover	04	BUILT-UP 100
Interior Wall	01	MINIMUM 100
Interior Floo	07	CORK/VTILE 100
Ceiling	01	FIN.SUSPD 100
Air Condition	06	ENG CENTRL 100
Heating Type	09	ENG F AIR 100
Fixtures		29 100
Frame	03	MASONRY 100
Story Height		9 100
RMS		29 100
Stories	1.	1. 100
Units		0 100
BUD8 Adjustme	06	DIST 1D 100
Occupancy	00	NONE 100
Quality	04	Quality Level 04
DOR CODE	8300	PUBLIC SCHOOLS
MAP NUM		MKT AREA 08
NEIGHBORHOOD/LOC	8001.00	

AREA TYPE	TOTAL GROSS AREA	PCT OF BASE	TOT ADJ AREA	SUBAREA MARKET VALUE
BAS	11,604	100	11,604	1,609,241
FOP	36	30	11	1,526
FOP	36	30	11	1,526
FOP	75	30	22	3,051
FOP	75	30	22	3,051
FOP	75	30	22	3,051
FOP	75	30	22	3,051
TOTALS	11,976		11,714	1,624,495

MARKET ADJUSTMENTS

TYPE	MDL	EFF. AREA	TOT ADJ PTS	EFF. BASE RATE	REPL. COST NEW	AYB	EYB	ECON	FNCT		NORM	% COND
7201	04	11,714	89.2261	174.44	2,043,390	1999	1999	0	0	0	20.50	79.50

6 SCHOOL – 0% - 0 Heated Area: 11604 HX Base Yr

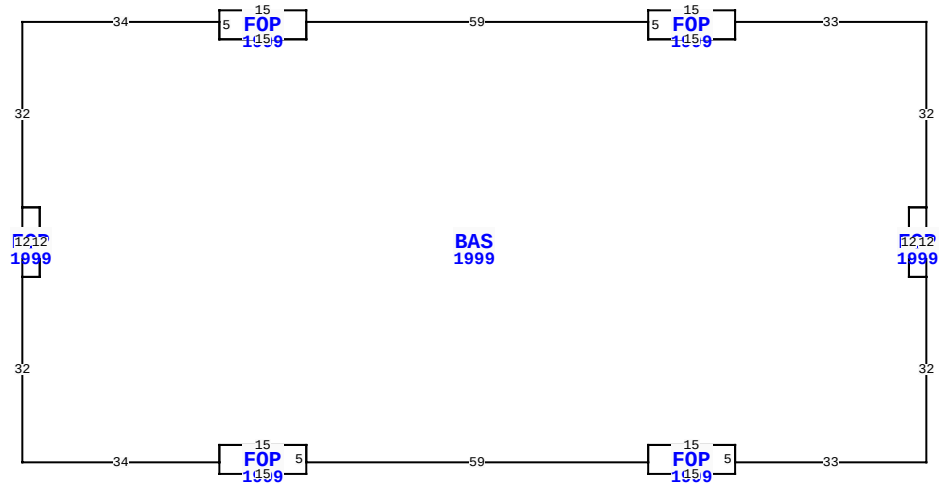

34586 BALLPARK RD, CALLAHAN

BLD DATE		LGL DATE	
XF DATE		LAND DATE	06/21/2024 TD
INC DATE		AG DATE	

NASSAU COUNTY PROPERTY

PAGE 6 of 9 6

VALUATION SUMMARY

VALUATION BY		STANDARD
Tax Group: 6	Tax Dist:	
BUILDING MARKET VALUE		14,262,264
TOTAL MARKET OB/XF VALUE		499,514
TOTAL LAND VALUE - MARKET		2,300,500
TOTAL MARKET VALUE		17,062,278
SOH/AGL Deduction		6,390,733
ASSESSED VALUE		10,671,545
TOTAL EXEMPTION VALUE	01	10,671,545
BASE TAXABLE VALUE		0
TOTAL JUST VALUE		17,062,278
NCON VALUE		0
INCOME VALUE		
PREVIOUS YEAR MKT VALUE		15,730,705

PERMIT NUM	DESCRIPTION	AMT	ISSUED

SALES DATA

OFF RECORD Number	DATE	TYPE INST	Q / U	V / I	RSN CD	SALE PRICE
0221/0376	1/01/1976	WD	Q	V		6,600

GRANTOR:

GRANTEE:

BUILDING NOTES

BUILDING DIMENSIONS

BAS=[YR=1999] W33 FOP=[YR=1999] N2 W15 S5 E15 N3$ S3 W15 N3 W59 FOP=[YR=1999] N2 W15 S5 E15 N3$ S3 W15 N3 W34 S32 FOP=[YR=1999] S12 E3 N12W3$ E3 S12 W3 S32 E34 FOP=[YR=1999] S2 E15 N5 W15 S3$ N3 E15 S3 E59 FOP=[YR=1999] S2 E15 N5 W15 S3$ N3 E15 S3 E33 N32 FOP=[YR=1999] N12 W3 S12 E3 $ W3 N12 E3 N32 $.

EXTRA FEATURES

L N	OB/XF CODE	DESCRIPTION	BLD	CAP	L	W	UNITS	UT	Adj R	ADJ UNIT PRICE	ORIG COND	YEAR ON	YEAR ACTUAL	Q	% COND	OB/XF MKT VALUE	NOTES

LAND DESCRIPTION

TOTAL OB/XF 0

L N	USE CODE	CLS	LAND USE DESCRIPTION	CAP	R D	LOC ZONE	FRONT	DEPTH	TOT LND UTS	UNIT TYPE	D T	DPTH FACT	% COND	TOT ADJ	UNIT PRICE	ADJ UNIT PRICE	LAND VALUE	OTHER ADJUSTMENTS AND NOTES	YEAR	DENSITY	DECL	FRZ	YR	CONSRV

REVIEW DATE 02/01/2024 BY KBA Total Acres: 46.01 Total Land Value: 2,300,500 Market: 0 Agricultural: 0 Common: 2,300,500 PRINTED 08/06/2024 BY SYS

IN OR 221/376
ESMTS OR 399/338 & OR 554/172
EX 1-8 & R/W

NASSAU COUNTY SCHOOL BOARD/
(CALLAHAN INTERMEDIATE), 1201 ATLANTIC AVENUE
FERNANDINA BEACH, FL 32034

2024

35-2N-24-0000-0001-0010

NASSAU COUNTY PROPERTY

BUILDING CHARACTERISTICS

ELEMENT	CD	CONSTRUCTION
Exterior Wall	05	AVERAGE 100
Roof Structur	03	GABLE/HIP 100
Roof Cover	03	COMP SHNGL 100
Interior Wall	04	PLYWOOD 100
Interior Floo	14	CARPET 100
Ceiling	02	F.NOT SUS 100
Air Condition	02	WINDOW 100
Heating Type	01	NONE 100
Fixtures		0 100
Frame	02	WOOD FRAME 100
Story Height		10 100
RMS		1 100
Stories	1.	1. 100
Units		0 100
BUD8 Adjustme	06	DIST 1D 100
Occupancy	00	NONE 100
Quality	03	Quality Level 03
DOR CODE	8300	PUBLIC SCHOOLS
MAP NUM		MKT AREA 08
NEIGHBORHOOD/LOC	8001.00	

AREA TYPE	TOTAL GROSS AREA	PCT OF BASE	TOT ADJ AREA	SUBAREA MARKET VALUE
BAS	960	100	960	111,041
UOP	28	20	6	694
UOP	44	20	9	1,041
UOP	45	20	9	1,041
TOTALS	1,077		984	113,817

MARKET ADJUSTMENTS

TYPE	MDL	EFF. AREA	TOT ADJ PTS	EFF. BASE RATE	REPL. COST NEW	AYB	EYB	ECON	FNCT		NORM	% COND
7201	04	984	72.8175	142.36	140,082	1977	1977	0	0	0	18.75	81.25

7 SCHOOL – 0% - 0 Heated Area: 960 HX Base Yr

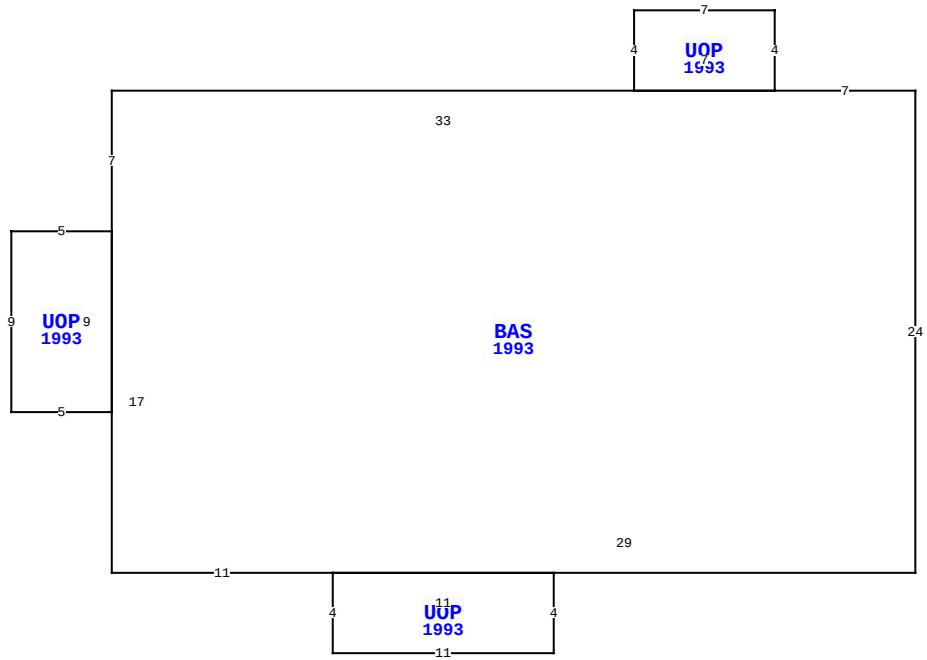

34586 BALLPARK RD, CALLAHAN

BLD DATE		LGL DATE	
XF DATE		LAND DATE	06/21/2024 TD
INC DATE		AG DATE	

VALUATION SUMMARY

VALUATION BY		STANDARD
Tax Group: 6	Tax Dist:	
BUILDING MARKET VALUE		14,262,264
TOTAL MARKET OB/XF VALUE		499,514
TOTAL LAND VALUE - MARKET		2,300,500
TOTAL MARKET VALUE		17,062,278
SOH/AGL Deduction		6,390,733
ASSESSED VALUE		10,671,545
TOTAL EXEMPTION VALUE	01	10,671,545
BASE TAXABLE VALUE		0
TOTAL JUST VALUE		17,062,278
NCON VALUE		0
INCOME VALUE		
PREVIOUS YEAR MKT VALUE		15,730,705

PERMIT NUM	DESCRIPTION	AMT	ISSUED

SALES DATA

OFF RECORD Number	DATE	TYPE INST	Q / U	V / I	RSN CD	SALE PRICE
0221/0376	1/01/1976	WD	Q	V		6,600

GRANTOR:

GRANTEE:

BUILDING NOTES

BUILDING DIMENSIONS

BAS=[YR=1993] W7 UOP=[YR=1993] N4 W7 S4 E7 $ W33 S7
UOP=[YR=1993] W5 S9 E5 N9 $ S17 E11 UOP=[YR=1993] S4 E11 N4 W11 $ E29 N24 $.

EXTRA FEATURES

L N	OB/XF CODE	DESCRIPTION	BLD	CAP	L	W	UNITS	UT	Adj R	ADJ UNIT PRICE	ORIG COND	YEAR ON	YEAR ACTUAL	Q	% COND	OB/XF MKT VALUE	NOTES

LAND DESCRIPTION

TOTAL OB/XF 0

L N	USE CODE	CLS	LAND USE DESCRIPTION	CAP	R D	LOC ZONE	FRONT	DEPTH	TOT LND UTS	UNIT TYPE	D T	DPTH FACT	% COND	TOT ADJ	UNIT PRICE	ADJ UNIT PRICE	LAND VALUE	OTHER ADJUSTMENTS AND NOTES	YEAR	DENSITY	DECL	FRZ	YR	CONSRV

REVIEW DATE 02/01/2024 BY KBA Total Acres: 46.01 Total Land Value: 2,300,500 Market: 0 Agricultural: 0 Common: 2,300,500 PRINTED 08/06/2024 BY SYS

IN OR 221/376
ESMTS OR 399/338 & OR 554/172
EX 1-8 & R/W

NASSAU COUNTY SCHOOL BOARD/
(CALLAHAN INTERMEDIATE), 1201 ATLANTIC AVENUE
FERNANDINA BEACH, FL 32034

2024

35-2N-24-0000-0001-0010

BUILDING CHARACTERISTICS

ELEMENT	CD	CONSTRUCTION
Exterior Wall	05	AVERAGE 100
Roof Structur	03	GABLE/HIP 100
Roof Cover	03	COMP SHNGL 100
Interior Wall	04	PLYWOOD 100
Interior Floo	14	CARPET 100
Ceiling	02	F.NOT SUS 100
Air Condition	01	NONE 100
Heating Type	01	NONE 100
Fixtures		0 100
Frame	02	WOOD FRAME 100
Story Height		10 100
RMS		1 100
Stories	1.	1. 100
Units		0 100
BUD8 Adjustme	06	DIST 1D 100
Occupancy	00	NONE 100
Quality	03	Quality Level 03

DOR CODE	8300	PUBLIC SCHOOLS	
MAP NUM		MKT AREA	08
NEIGHBORHOOD/LOC	8001.00		

AREA TYPE	TOTAL GROSS AREA	PCT OF BASE	TOT ADJ AREA	SUBAREA MARKET VALUE
BAS	816	100	816	93,092
UOP	32	20	6	684
UOP	136	20	27	3,080
TOTALS	984		849	96,856

MARKET ADJUSTMENTS

TYPE	MDL	EFF. AREA	TOT ADJ PTS	EFF. BASE RATE	REPL. COST NEW	AYB	EYB	ECON	FNCT		NORM	% COND
7201	04	849	71.8200	140.41	119,208	1977	1977	0	0	0	18.75	81.25

8 SCHOOL – 0% - 0 Heated Area: 816 HX Base Yr

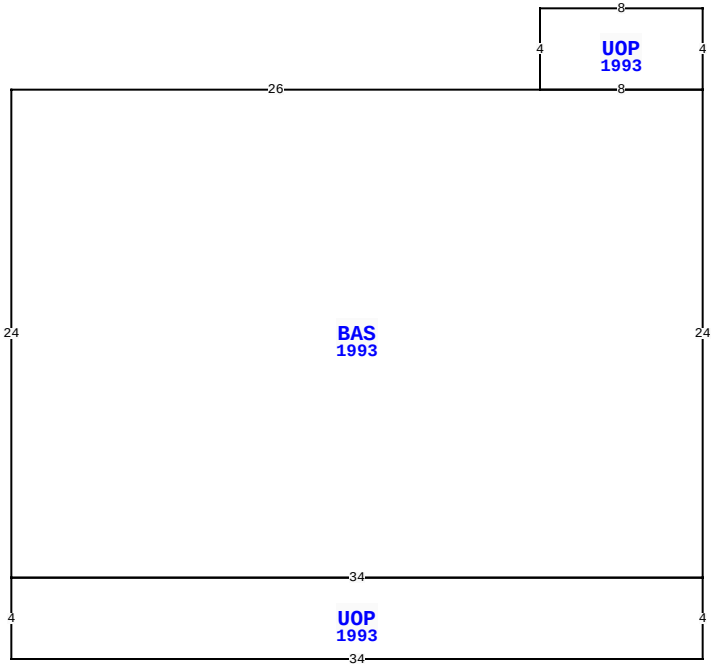

34586 BALLPARK RD, CALLAHAN

BLD DATE		LGL DATE	
XF DATE		LAND DATE	06/21/2024 TD
INC DATE		AG DATE	

NASSAU COUNTY PROPERTY

PAGE 8 of 9 6

VALUATION SUMMARY

VALUATION BY		STANDARD
Tax Group: 6	Tax Dist:	
BUILDING MARKET VALUE		14,262,264
TOTAL MARKET OB/XF VALUE		499,514
TOTAL LAND VALUE - MARKET		2,300,500
TOTAL MARKET VALUE		17,062,278
SOH/AGL Deduction		6,390,733
ASSESSED VALUE		10,671,545
TOTAL EXEMPTION VALUE	01	10,671,545
BASE TAXABLE VALUE		0
TOTAL JUST VALUE		17,062,278
NCON VALUE		0
INCOME VALUE		
PREVIOUS YEAR MKT VALUE		15,730,705

PERMIT NUM	DESCRIPTION	AMT	ISSUED

SALES DATA

OFF RECORD Number	DATE	TYPE INST	Q / U	V / I	RSN CD	SALE PRICE
0221/0376	1/01/1976	WD	Q	V		6,600

GRANTOR:

GRANTEE:

BUILDING NOTES

BUILDING DIMENSIONS

UOP=[YR=1993] W8 S4 BAS=[YR=1993] W26 S24 UOP=[YR=1993] S4 E34 N4 W34 $ E34 N24 W8 $ E8 N4 $.

EXTRA FEATURES

LN	OB/XF CODE	DESCRIPTION	BLD	CAP	L	W	UNITS	UT	Adj R	ADJ UNIT PRICE	ORIG COND	YEAR ON	YEAR ACTUAL	Q	% COND	OB/XF MKT VALUE	NOTES

LAND DESCRIPTION

TOTAL OB/XF 0

LN	USE CODE	CLS	LAND USE DESCRIPTION	CAP	RD	LOC ZONE	FRONT	DEPTH	TOT LND UTS	UNIT TYPE	DT	DPTH FACT	% COND	TOT ADJ	UNIT PRICE	ADJ UNIT PRICE	LAND VALUE	OTHER ADJUSTMENTS AND NOTES	YEAR	DENSITY	DECL	FRZ	YR	CONSRV

REVIEW DATE 02/01/2024 BY KBA Total Acres: 46.01 Total Land Value: 2,300,500 Market: 0 Agricultural: 0 Common: 2,300,500 PRINTED 08/06/2024 BY SYS

IN OR 221/376
ESMTS OR 399/338 & OR 554/172
EX 1-8 & R/W

NASSAU COUNTY SCHOOL BOARD/
(CALLAHAN INTERMEDIATE), 1201 ATLANTIC AVENUE
FERNANDINA BEACH, FL 32034

2024

35-2N-24-0000-0001-0010

BUILDING CHARACTERISTICS

ELEMENT	CD	CONSTRUCTION
Exterior Wall	19	COMMON BRK 100
Roof Structur	01	FLAT 100
Roof Cover	04	BUILT-UP 100
Interior Wall	01	MINIMUM 100
Interior Floo	07	CORK/VTILE 100
Ceiling	01	FIN.SUSPD 100
Air Condition	06	ENG CENTRL 100
Heating Type	09	ENG F AIR 100
Fixtures		20 100
Frame	03	MASONRY 100
Story Height		9 100
RMS		17 100
Stories	1.	1. 100
Units		0 100
Occupancy	00	NONE 100
Quality	04	Quality Level 04
DOR CODE	8300	PUBLIC SCHOOLS
MAP NUM		MKT AREA 08
NEIGHBORHOOD/LOC	8001.00	

AREA TYPE	TOTAL GROSS AREA	PCT OF BASE	TOT ADJ AREA	SUBAREA MARKET VALUE
BAS	9,147	100	9,147	1,390,250
FOP	45	30	14	2,128
FOP	55	30	16	2,432
FOP	74	30	22	3,344
FOP	74	30	22	3,344
FOP	74	30	22	3,344
PTO	45	5	2	304
TOTALS	9,514		9,245	1,405,145

MARKET ADJUSTMENTS

TYPE	MDL	EFF. AREA	TOT ADJ PTS	EFF. BASE RATE	REPL. COST NEW	AYB	EYB	ECON	FNCT		NORM	% COND
7201	04	9,245	90.1365	176.22	1,629,154	2008	2008	0	0	0	13.75	86.25

26 SCHOOL – 0% - 0 Heated Area: 9147 HX Base Yr

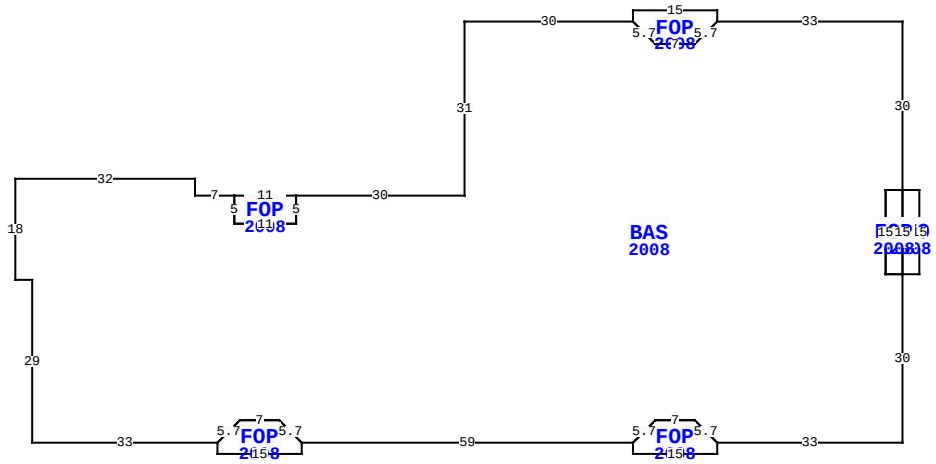

34586 BALLPARK RD, CALLAHAN

BLD DATE		LGL DATE	
XF DATE		LAND DATE	06/21/2024 TD
INC DATE		AG DATE	

NASSAU COUNTY PROPERTY

PAGE 9 of 9 6

VALUATION SUMMARY

VALUATION BY		STANDARD
Tax Group: 6	Tax Dist:	
BUILDING MARKET VALUE		14,262,264
TOTAL MARKET OB/XF VALUE		499,514
TOTAL LAND VALUE - MARKET		2,300,500
TOTAL MARKET VALUE		17,062,278
SOH/AGL Deduction		6,390,733
ASSESSED VALUE		10,671,545
TOTAL EXEMPTION VALUE	01	10,671,545
BASE TAXABLE VALUE		0
TOTAL JUST VALUE		17,062,278
NCON VALUE		0
INCOME VALUE		
PREVIOUS YEAR MKT VALUE		15,730,705

PERMIT NUM	DESCRIPTION	AMT	ISSUED

SALES DATA

OFF RECORD Number	DATE	TYPE INST	Q / U	V / I	RSN CD	SALE PRICE
0221/0376	1/01/1976	WD	Q	V		6,600

GRANTOR:

GRANTEE:

BUILDING NOTES

BUILDING DIMENSIONS

BAS=[YR=2008] W33 FOP=[YR=2008] N2 W15 S2 D4 R4 E7 U4 R4 $ D4 L4 W7 U4 L4 W30 S31 W30 FOP=[YR=2008] W11 S5 E11 N5$ S5 W11 N5 W7 N3 W32 S18 E3 S29 E33 FOP=[YR=2008] S2 E15 N2 U4 L4 W7 D4 L4 $ U4 R4 E7 D4 R4 E59 FOP=[YR=2008] S2 E15 N2 U4 L4 W7 D4 L4 $ U4 R4 E7 D4 R4 E33 N30 PTO=[YR=2008] E3 N15 W3 FOP=[YR=2008] W3 S15 E3 N15$ S15$ W3 N15 E3 N30$.

EXTRA FEATURES

L N	OB/XF CODE	DESCRIPTION	BLD	CAP	L	W	UNITS	UT	Adj R	ADJ UNIT PRICE	ORIG COND	YEAR ON	YEAR ACTUAL	Q	% COND	OB/XF MKT VALUE	NOTES

LAND DESCRIPTION

TOTAL OB/XF 0

L N	USE CODE	CLS	LAND USE DESCRIPTION	CAP	R D	LOC ZONE	FRONT	DEPTH	TOT LND UTS	UNIT TYPE	D T	DPTH FACT	% COND	TOT ADJ	UNIT PRICE	ADJ UNIT PRICE	LAND VALUE	OTHER ADJUSTMENTS AND NOTES	YEAR	DENSITY	DECL	FRZ	YR	CONSRV

REVIEW DATE 02/01/2024 BY KBA Total Acres: 46.01 Total Land Value: 2,300,500 Market: 0 Agricultural: 0 Common: 2,300,500 PRINTED 08/06/2024 BY SYS