LOT 5
MILLS CORNER PBK 8/271
ESMT IN OR 2512-978

HENSON ROBERT SAMUEL III & TINA LORAINE
56033 GRIFFIN RD
CALLAHAN, FL 32011

2024

34-3N-25-0121-0005-0000

NASSAU COUNTY PROPERTY

BUILDING CHARACTERISTICS

ELEMENT	CD	CONSTRUCTION
Exterior Wall	31	HARDIE BRD 90
Exterior Wall	20	FACE BRICK 10
Roof Structur	08	IRREGULAR 100
Roof Cover	03	COMP SHNGL 100
Interior Wall	05	DRYWALL 100
Interior Floo	11	CLAY TILE 70
Interior Floo	14	CARPET 30
Air Condition	03	CENTRAL 100
Heating Type	04	AIR DUCTED 100
Bedrooms		3 100
Bathrooms		2.5 100
Frame	02	WOOD FRAME 100
Stories	0	0 100
Units		0 100
Occupancy	00	NONE 100
Quality	03	Quality Level 03
DOR CODE	0100	SINGLE FAMILY
MAP NUM		MKT AREA 05
NEIGHBORHOOD/LOC	5019.00	

AREA TYPE	TOTAL GROSS AREA	PCT OF BASE	TOT ADJ AREA	SUBAREA MARKET VALUE
BAS	2,094	100	2,094	361,846
FCP	576	25	144	24,883
FOP	287	30	86	14,861
FOP	366	30	110	19,008
FST	44	55	24	4,148
UAT	288	10	29	5,011
TOTALS	3,655		2,487	429,758

MARKET ADJUSTMENTS

TYPE	MDL	EFF. AREA	TOT ADJ PTS	EFF. BASE RATE	REPL. COST NEW	AYB	EYB	ECON	FNCT		NORM	% COND
0500	01	2,487	115.2960	172.94	430,102	2022	2022	0	0	0	0.08	99.92

1 SFR CUST – 100% - 2023 Heated Area: 2094 HX Base Yr 2023

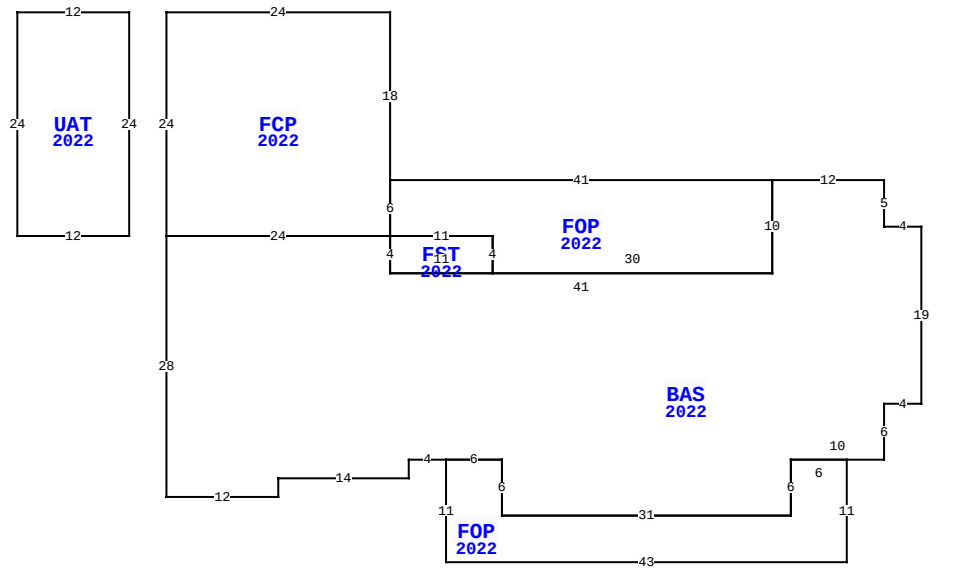

56033 GRIFFIN RD, CALLAHAN

BLD DATE		LGL DATE	
XF DATE		LAND DATE	05/19/2023 MLU
INC DATE		AG DATE	

NASSAU COUNTY PROPERTY — VALUATION SUMMARY

VALUATION BY		STANDARD
Tax Group: 4	Tax Dist:	
BUILDING MARKET VALUE		429,758
TOTAL MARKET OB/XF VALUE		21,929
TOTAL LAND VALUE - MARKET		80,000
TOTAL MARKET VALUE		531,687
SOH/AGL Deduction		141,446
ASSESSED VALUE		390,241
TOTAL EXEMPTION VALUE	HX HB	50,000
BASE TAXABLE VALUE		340,241
TOTAL JUST VALUE		531,687
NCON VALUE		0
INCOME VALUE		
PREVIOUS YEAR MKT VALUE		443,592

PERMIT NUM	DESCRIPTION	AMT	ISSUED
22008512	XFOB	34,813	06/02/2022
21012254	CO ISSUED	0	03/02/2022
21012254	NEW CONSTR	302,535	09/14/2021

SALES DATA

OFF RECORD Number	DATE	TYPE INST	Q U	V I	RSN CD	SALE PRICE
2453/1684	4/16/2021	WD	Q	V	01	100,000
GRANTOR: MATTHEWS KYLE & MICHE						
GRANTEE: HENSON ROBERT SAMUE						
2270/0580	4/12/2019	SW	Q	V	01	70,000
GRANTOR: RAYDIENT LLC DBA RAYD						
GRANTEE: MATTHEWS KYLE & BRE						

BUILDING NOTES

BUILDING DIMENSIONS

BAS=[YR=2022;ORIG=0,0] W4 N5 W12 S10 W41 N4 W24 S28 E12 N2
E14 N2 E4 E6 S6 E31 N6 E10 N6 E4 N19 $
FCP=[YR=2022;ORIG=-57,-5] N18 W24 S24 E24 N6 $
FOP=[YR=2022;ORIG=-16,-5] W41 S6 E11 S4 E30 N10 $
UAT=[YR=2022;ORIG=-85,-23] W12 S24 E12 N24 $
FOP=[YR=2022;ORIG=-51,25] S11 E43 N11 W6 S6 W31 N6 W6 $
FST=[YR=2022;ORIG=-57,1] S4 E11 N4 W11 $
.

EXTRA FEATURES

LN	OB/XF CODE	DESCRIPTION	BLD	CAP	L	W	UNITS	UT	Adj R	ADJ UNIT PRICE	ORIG COND	YEAR ON	YEAR ACTUAL	Q	% COND	OB/XF MKT VALUE	NOTES
1	0504	FP-ELECTRI	0	100	0	0	1.00	UT	2,000.00	2,000.00	100	2022	2022	3	100	2,000	
2	0811	CONCRETE B	0	100	24	24	576.00	SF	5.20	5.20	100	2022	2022	3	100	2,995	
3	0680	POLE SHED	0	100	48	36	1,728.00	SF	10.00	10.00	100	2022	2022	3	98	16,934	

LAND DESCRIPTION

TOTAL OB/XF 21,929

LN	USE CODE	CLS	LAND USE DESCRIPTION	CAP	RD	LOC ZONE	FRONT	DEPTH	TOT LND UTS	UNIT TYPE	DT	DPTH FACT	% COND	TOT ADJ	UNIT PRICE	ADJ UNIT PRICE	LAND VALUE	OTHER ADJUSTMENTS AND NOTES	YEAR	DENSITY	DECL	FRZ	YR	CONSRV
1	000115	C	SFR ACRES	100		OR	0.00	0.00	5.00	AC		1.00	1.00	1.00	16,000.00	16,000.00	80,000							

REVIEW DATE 06/16/2022 BY TWWW Total Acres: 5.00 Total Land Value: 80,000 Market: 0 Agricultural: 0 Common: 80,000 PRINTED 08/06/2024 BY SYS