LOTS 5 & 6
IN OR 795 PG 1076
ELLIS LANDING SEC 2 UNR

TALBOT DONALD W & ELIZABETH A
95253 WILDER BLVD
FERNANDINA BEACH, FL 32034

2024

34-2N-28-5132-0005-0000

BUILDING CHARACTERISTICS

ELEMENT	CD	CONSTRUCTION
Exterior Wall	05	AVERAGE 100
Roof Structur	03	GABLE/HIP 100
Roof Cover	03	COMP SHNGL 100
Interior Wall	05	DRYWALL 100
Interior Floo	14	CARPET 80
Interior Floo	08	SHT VINYL 20
Air Condition	03	CENTRAL 100
Heating Type	04	AIR DUCTED 100
Bedrooms		4 100
Bathrooms		2.5 100
Frame	02	WOOD FRAME 100
Stories	2.	2. 100
Units		0 100
Occupancy	00	NONE 100
Quality	01	Quality Level 01
DOR CODE	0100	SINGLE FAMILY
MAP NUM		MKT AREA 04
NEIGHBORHOOD/LOC	4005.00	

AREA TYPE	TOTAL GROSS AREA	PCT OF BASE	TOT ADJ AREA	SUBAREA MARKET VALUE
BAS	1,649	100	1,649	157,529
FGR	539	55	296	28,277
FOP	175	30	52	4,967
FST	170	55	94	8,980
FUS	970	100	970	92,665
PTO	297	5	15	1,433
TOTALS	3,800		3,076	293,852

MARKET ADJUSTMENTS

TYPE	MDL	EFF. AREA	TOT ADJ PTS	EFF. BASE RATE	REPL. COST NEW	AYB	EYB	ECON	FNCT		NORM	% COND
0900	01	3,076	86.1120	107.64	331,101	2000	2000	0	0	0	11.25	88.75

1 SNGL FAM – 100% - 2001 Heated Area: 2619 HX Base Yr 2001

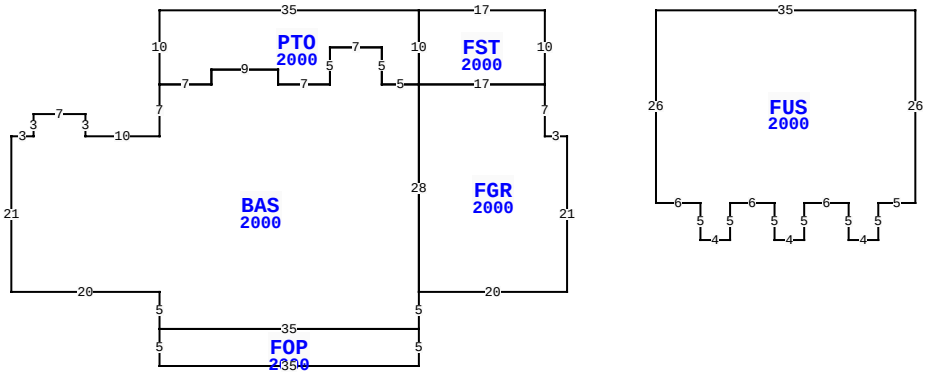

95253 WILDER BLVD, FERNANDINA BEACH

BLD DATE		LGL DATE	
XF DATE		LAND DATE	05/30/2023 MLU
INC DATE		AG DATE	

NASSAU COUNTY PROPERTY

PAGE 1 of 1 4

VALUATION SUMMARY

VALUATION BY		STANDARD
Tax Group: 4	Tax Dist:	
BUILDING MARKET VALUE		293,852
TOTAL MARKET OB/XF VALUE		8,083
TOTAL LAND VALUE - MARKET		108,750
TOTAL MARKET VALUE		410,685
SOH/AGL Deduction		196,706
ASSESSED VALUE		213,979
TOTAL EXEMPTION VALUE	HX HB	50,000
BASE TAXABLE VALUE		163,979
TOTAL JUST VALUE		410,685
NCON VALUE		0
INCOME VALUE		
PREVIOUS YEAR MKT VALUE		397,672

PERMIT NUM	DESCRIPTION	AMT	ISSUED
996637	NEW CONSTR	150,000	11/01/1999

SALES DATA

OFF RECORD Number	DATE	TYPE INST	Q / U	V / I	RSN CD	SALE PRICE
0795/1076	6/04/1997	WD	U	V	07	100
GRANTOR: RIVERA ELISEO & MYRNA						
GRANTEE: TALBOT DONALD & ELI						
0791/0966	4/25/1997	WD	Q	V		26,500
GRANTOR: RIVERA ELISEO & MYRNA						
GRANTEE: TALBOT DONALD & ELI						

BUILDING NOTES

BUILDING DIMENSIONS

FST=[YR=2000] W17 PTO=[YR=2000] W35 S10 BAS=[YR=2000] S7 W10 N3 W7 S3 W3 S21 E20 S5 FOP=[YR=2000] S5 E35 N5 W35 $ E35 N5 FGR=[YR=2000] E20 N21 W3 N7 W17 S28 $ N28 W5 N5 W7 S5 W7 N2 W9 S2 W7 $ E7 N2 E9 S2 E7 N5 E7 S5 E5 N10 $ S10 E17 N10 $ PTR= E15 FUS=[YR=2000] E35 S26 W5 S5 W4 N5 W6 S5 W4 N5 W6 S5 W4 N5 W6 N26 $ W15 $.

EXTRA FEATURES

LN	OB/XF CODE	DESCRIPTION	BLD	CAP	L	W	UNITS	UT	Adj R	ADJ UNIT PRICE	ORIG COND	YEAR ON	YEAR ACTUAL	Q	% COND	OB/XF MKT VALUE	NOTES
1	0812	CONCRETE C	0	100	0	0	2,020.00	SF	4.00	4.00	100	2000	2000	3	79	6,383	
2	0504	FP-ELECTRI	0	100	0	0	1.00	UT	2,000.00	2,000.00	100	2001	2001	3	85	1,700	

LAND DESCRIPTION

TOTAL OB/XF 8,083

LN	USE CODE	CLS	LAND USE DESCRIPTION	CAP	RD	LOC ZONE	FRONT	DEPTH	TOT LND UTS	UNIT TYPE	DT	DPTH FACT	% COND	TOT ADJ	UNIT PRICE	ADJ UNIT PRICE	LAND VALUE	OTHER ADJUSTMENTS AND NOTES	YEAR	DENSITY	DECL	FRZ	YR	CONSRV
1	000100	C	SFR	100		RSF-1	0.00	0.00	1.45	AC		1.00	1.00	1.00	75,000.00	75,000.00	108,750							

REVIEW DATE 05/12/2019 BY KBA Total Acres: 1.45 Total Land Value: 108,750 Market: 0 Agricultural: 0 Common: 108,750 PRINTED 08/06/2024 BY SYS