LOT 19
IN OR 2070/981
TURNING LEAF PB 7/275

CHAMBLESS RUSSELL L & RHONDA F
54203 TURNING LEAF DR
CALLAHAN, FL 32011

2024

34-2N-25-208T-0019-0000

NASSAU COUNTY PROPERTY

BUILDING CHARACTERISTICS

ELEMENT	CD	CONSTRUCTION
Exterior Wall	16	WD FR STUC 50
Exterior Wall	17	CB STUCCO 50
Roof Structur	03	GABLE/HIP 100
Roof Cover	03	COMP SHNGL 100
Interior Wall	05	DRYWALL 100
Interior Floo	14	CARPET 70
Interior Floo	08	SHT VINYL 30
Air Condition	03	CENTRAL 100
Heating Type	04	AIR DUCTED 100
Bedrooms		4 100
Bathrooms		2.5 100
Frame	02	WOOD FRAME 100
Stories	2.	2. 100
Units		0 100
Occupancy	00	NONE 100
Quality	06	Quality Level 06
DOR CODE	0100	SINGLE FAMILY
MAP NUM		MKT AREA 08
NEIGHBORHOOD/LOC	8012.00	

AREA TYPE	TOTAL GROSS AREA	PCT OF BASE	TOT ADJ AREA	SUBAREA MARKET VALUE
BAS	1,318	100	1,318	128,513
FGR	624	55	343	33,444
FOP	18	30	5	488
FSP	300	40	120	11,701
FUS	1,644	100	1,644	160,300
USP	320	30	96	9,361
TOTALS	4,224		3,526	343,807

MARKET ADJUSTMENTS

TYPE	MDL	EFF. AREA	TOT ADJ PTS	EFF. BASE RATE	REPL. COST NEW	AYB	EYB	ECON	FNCT		NORM	% COND
0100	01	3,526	109.1925	103.73	365,752	2011	2011	0	0	0	6.00	94.00

1 SINGLE FAM – 100% - 2017 Heated Area: 2962 HX Base Yr 2017

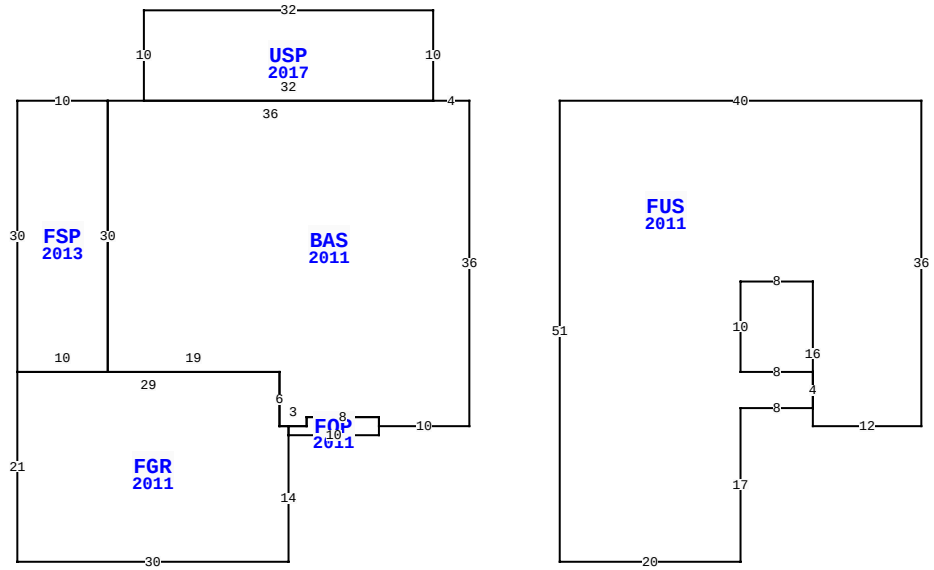

54203 TURNING LEAF DR, CALLAHAN

BLD DATE		LGL DATE	
XF DATE		LAND DATE	
INC DATE		AG DATE	

VALUATION SUMMARY

VALUATION BY		STANDARD
Tax Group: 6	Tax Dist:	
BUILDING MARKET VALUE		343,807
TOTAL MARKET OB/XF VALUE		32,758
TOTAL LAND VALUE - MARKET		40,000
TOTAL MARKET VALUE		416,565
SOH/AGL Deduction		175,006
ASSESSED VALUE		241,559
TOTAL EXEMPTION VALUE	HX HB VX	55,000
BASE TAXABLE VALUE		186,559
TOTAL JUST VALUE		416,565
NCON VALUE		0
INCOME VALUE		
PREVIOUS YEAR MKT VALUE		402,160

PERMIT NUM	DESCRIPTION	AMT	ISSUED
21017294	XFOB	42,491	12/14/2021
B1327048	ADDITION	2,480	04/01/2013
C24597	CO ISSUED	0	07/28/2011
E23471	NEW CONSTR	0	05/01/2011
E23491	ELEC OTHER	0	05/01/2011
B24597	NEW CONSTR	332,686	04/01/2011

SALES DATA

OFF RECORD Number	DATE	TYPE INST	Q U /	V I /	RSN CD	SALE PRICE
2070/0981	9/07/2016	WD	Q	I	01	216,000
GRANTOR: LELEVIER JESSICA A &						
GRANTEE: CHAMBLESS RUSSELL L						
1749/1838	7/29/2011	WD	Q	I	01	195,900
GRANTOR: MARONDA HOMES INC						
GRANTEE: GLOMB JESSICA A						

BUILDING NOTES

BUILDING DIMENSIONS

BAS=[YR=2011] W4 USP=[YR=2017] N10 W32 S10 E32$ W36 FSP=[YR=2013] W10 S30 FGR=[YR=2011] S21 E30 N14 FOP=[YR=2011] E10 N2 W8 S1 W2 S1$ N1 W1 N6 W29$ E10 N30$ S30 E19 S6 E3 N1 E8 S1 E10 N36$ PTR=E10 FUS=[YR=2011] E40 S36 W12 N16 W8 S10 E8 S4 W8 S17 W20 N51$ W10$.

EXTRA FEATURES

LN	OB/XF CODE	DESCRIPTION	BLD	CAP	L	W	UNITS	UT	Adj R	ADJ UNIT PRICE	ORIG COND	YEAR ON	YEAR ACTUAL	Q	% COND	OB/XF MKT VALUE	NOTES
1	0811	CONCRETE B	0	100	0	0	1,153.00	SF	5.20	5.20	100	2011	2011	3	92	5,516	
2	0476	VF 6 SBPL	0	100	0	0	431.00	LF	32.00	32.00	100	2011	2011	3	81	11,172	
3	0940	SHEDS/PORT	0	100	16	36	576.00	SF	30.00	30.00	100	2021	2021	3	93	16,070	

LAND DESCRIPTION

TOTAL OB/XF 32,758

LN	USE CODE	CLS	LAND USE DESCRIPTION	CAP	RD	LOC ZONE	FRONT	DEPTH	TOT LND UTS	UNIT TYPE	DT	DPTH FACT	% COND	TOT ADJ	UNIT PRICE	ADJ UNIT PRICE	LAND VALUE	OTHER ADJUSTMENTS AND NOTES	YEAR	DENSITY	DECL	FRZ	YR	CONSRV
1	000100	C	SFR	100	0003	PUD	0.00	0.00	1.00	LT		1.00	1.00	1.00	40,000.00	40,000.00	40,000							

REVIEW DATE 03/16/2022 BY HS Total Acres: 0.00 Total Land Value: 40,000 Market: 0 Agricultural: 0 Common: 40,000 PRINTED 08/06/2024 BY SYS