LOT 17
IN OR 1993/449
TURNING LEAF PB 7/275

MILLER GERALD L & TIFFANY N
54239 TURNING LEAF DR
CALLAHAN, FL 32011

2024

34-2N-25-208T-0017-0000

NASSAU COUNTY PROPERTY

BUILDING CHARACTERISTICS

ELEMENT	CD	CONSTRUCTION
Exterior Wall	16	WD FR STUC 50
Exterior Wall	17	CB STUCCO 50
Roof Structur	03	GABLE/HIP 100
Roof Cover	03	COMP SHNGL 100
Interior Wall	05	DRYWALL 100
Interior Floo	14	CARPET 60
Interior Floo	08	SHT VINYL 40
Air Condition	03	CENTRAL 100
Heating Type	04	AIR DUCTED 100
Bedrooms		4 100
Bathrooms		2.5 100
Frame	02	WOOD FRAME 100
Stories	2.	2. 100
Units		0 100
Occupancy	00	NONE 100
Quality	06	Quality Level 06

DOR CODE	0100	SINGLE FAMILY	
MAP NUM		MKT AREA	08
NEIGHBORHOOD/LOC	8012.00		

AREA TYPE	TOTAL GROSS AREA	PCT OF BASE	TOT ADJ AREA	SUBAREA MARKET VALUE
BAS	1,300	100	1,300	126,758
FGR	630	55	346	33,738
FOP	30	30	9	878
FSP	300	40	120	11,701
FUS	1,800	100	1,800	175,511
PTO	320	5	16	1,560
TOTALS	4,380		3,591	350,144

MARKET ADJUSTMENTS

TYPE	MDL	EFF. AREA	TOT ADJ PTS	EFF. BASE RATE	REPL. COST NEW	AYB	EYB	ECON	FNCT		NORM	% COND
0100	01	3,591	109.1925	103.73	372,494	2011	2011	0	0	0	6.00	94.00

1 SINGLE FAM – 100% - 2016 Heated Area: 3100 HX Base Yr 2016

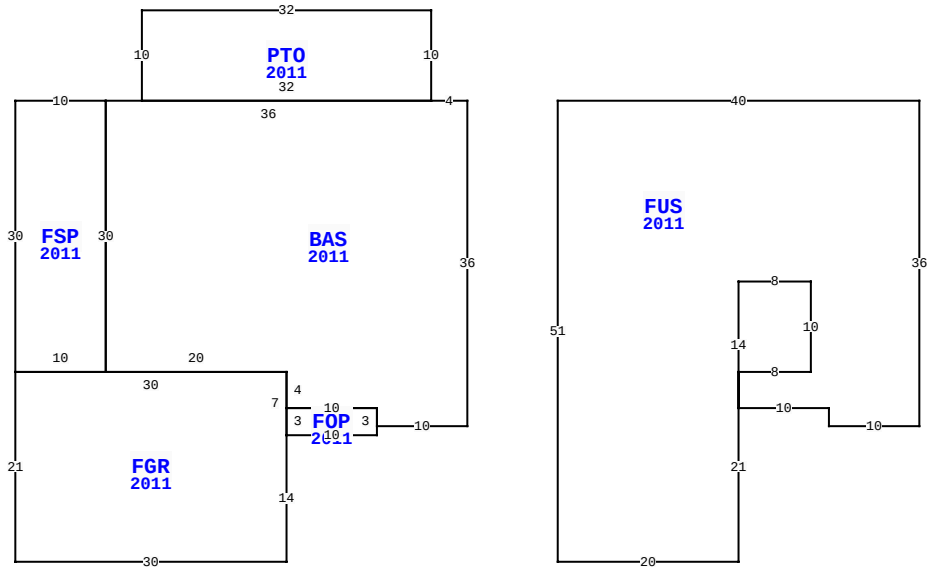

54239 TURNING LEAF DR, CALLAHAN

BLD DATE		LGL DATE	
XF DATE		LAND DATE	
INC DATE		AG DATE	

VALUATION SUMMARY

VALUATION BY		STANDARD
Tax Group: 6	Tax Dist:	
BUILDING MARKET VALUE		350,144
TOTAL MARKET OB/XF VALUE		15,800
TOTAL LAND VALUE - MARKET		40,000
TOTAL MARKET VALUE		405,944
SOH/AGL Deduction		243,761
ASSESSED VALUE		162,183
TOTAL EXEMPTION VALUE	HX HB	50,000
BASE TAXABLE VALUE		112,183
TOTAL JUST VALUE		405,944
NCON VALUE		0
INCOME VALUE		
PREVIOUS YEAR MKT VALUE		390,511

PERMIT NUM	DESCRIPTION	AMT	ISSUED
C24757	CO ISSUED	0	09/22/2011
M16379	H/AC	0	07/01/2011
E23622	ELEC OTHER	0	07/01/2011
P1114822	PLUMBING	0	06/01/2011
B24757	NEW CONSTR	332,686	05/01/2011

SALES DATA

OFF RECORD Number	DATE	TYPE INST	Q U /	V I /	RSN CD	SALE PRICE
1993/0449	10/12/2014	WD	Q	I	02	204,800
GRANTOR: BIAS BRYAN ANTHONY &						
GRANTEE: MILLER GERALD L & T						
1879/1793	9/09/2013	SW	Q	I	01	200,900
GRANTOR: MARONDA HOMES INC OF						
GRANTEE: BIAS BRYAN ANTHONY						

BUILDING NOTES

BUILDING DIMENSIONS

BAS=[YR=2011] W4 PTO=[YR=2011] N10 W32 S10 E32$ W36 FSP=[YR=2011] W10 S30 FGR=[YR=2011] S21 E30 N14 FOP=[YR=2011] E10 N3 W10 S3$ N7 W30$ E10 N30 $ S30 E20 S4 E10 S2 E10 N36$ PTR=E10 FUS=[YR=2011] E40 S36 W10 N2 W10 N14 E8 S10 W8 S21 W20 N51$ W10$.

EXTRA FEATURES

LN	OB/XF CODE	DESCRIPTION	BLD	CAP	L	W	UNITS	UT	Adj R	ADJ UNIT PRICE	ORIG COND	YEAR ON	YEAR ACTUAL	Q	% COND	OB/XF MKT VALUE	NOTES
1	0811	CONCRETE B	0	100	0	0	1,202.00	SF	5.20	5.20	100	2011	2011	3	92	5,750	
2	0476	VF 6 SBPL	0	100	0	0	332.00	LF	32.00	32.00	100	2017	2017	3	92	9,774	
3	0470	VNYL GATE	0	100	0	0	1.00	UT	300.00	300.00	100	2017	2017	3	92	276	

LAND DESCRIPTION

TOTAL OB/XF 15,800

LN	USE CODE	CLS	LAND USE DESCRIPTION	CAP	RD	LOC ZONE	FRONT	DEPTH	TOT LND UTS	UNIT TYPE	DT	DPTH FACT	% COND	TOT ADJ	UNIT PRICE	ADJ UNIT PRICE	LAND VALUE	OTHER ADJUSTMENTS AND NOTES	YEAR	DENSITY	DECL	FRZ	YR	CONSRV
1	000100	C	SFR	100	0003	PUD	0.00	0.00	1.00	LT		1.00	1.00	1.00	40,000.00	40,000.00	40,000							

REVIEW DATE 12/02/2020 BY KBA Total Acres: 0.00 Total Land Value: 40,000 Market: 0 Agricultural: 0 Common: 40,000 PRINTED 08/06/2024 BY SYS