PT E1/2 & PT NW1/4 OF
SEC 34-2N-23E IN OR 1919/1205
(EX UTIL ESMT IN OR 1795/1500)

SMITH KIMBERLY JO
18811 CONNER RD
HILLIARD, FL 32046

2024

34-2N-23-0000-0002-0000

NASSAU COUNTY PROPERTY

BUILDING CHARACTERISTICS

ELEMENT	CD	CONSTRUCTION
Exterior Wall	25	MOD METAL 100
Roof Structur	03	GABLE/HIP 100
Roof Cover	12	MODULAR MT 100
Interior Wall		N/A 100
Interior Floo	03	CONC FINSH 100
Air Condition	03	CENTRAL 100
Heating Type	04	AIR DUCTED 100
Bedrooms		0 100
Bathrooms		0 100
Frame	05	STEEL 100
Stories	0	0 100
Units		0 100
Occupancy	00	NONE 100
Quality	06	Quality Level 06
DOR CODE	5500	TIMBERLAND 80-89
MAP NUM		MKT AREA 09
NEIGHBORHOOD/LOC	9001.00	

AREA TYPE	TOTAL GROSS AREA	PCT OF BASE	TOT ADJ AREA	SUBAREA MARKET VALUE
BAS	1,600	100	1,600	36,953
TOTALS	1,600		1,600	36,953

MARKET ADJUSTMENTS

TYPE	MDL	EFF. AREA	TOT ADJ PTS	EFF. BASE RATE	REPL. COST NEW	AYB	EYB	ECON	FNCT		NORM	% COND
6500	01	1,600	68.0340	23.81	38,096	2020	2020	0	0	0	3.00	97.00

2 GARAGE RES – 100% - 2021 Heated Area: 1600 HX Base Yr 2021

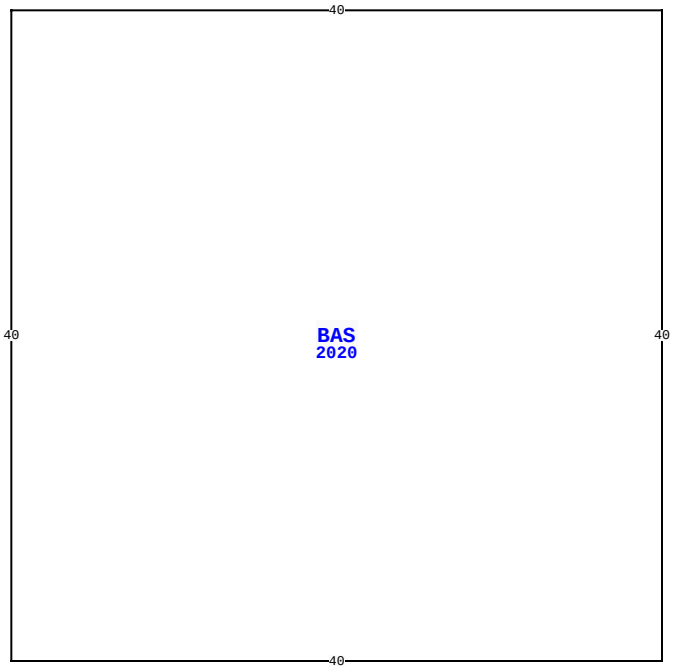

18811 CONNER RD, HILLIARD

BLD DATE		LGL DATE	
XF DATE		LAND DATE	06/13/2023 MLU
INC DATE		AG DATE	

VALUATION SUMMARY

VALUATION BY		STANDARD
Tax Group: 6	Tax Dist:	
BUILDING MARKET VALUE		562,623
TOTAL MARKET OB/XF VALUE		65,346
TOTAL LAND VALUE - MARKET		230,010
TOTAL MARKET VALUE		689,541
SOH/AGL Deduction		34,356
ASSESSED VALUE		655,185
TOTAL EXEMPTION VALUE	HX HB	50,000
BASE TAXABLE VALUE		605,185
TOTAL JUST VALUE		857,979
NCON VALUE		0
INCOME VALUE		
PREVIOUS YEAR MKT VALUE		836,782

PERMIT NUM	DESCRIPTION	AMT	ISSUED
21016450	CO ISSUED	0	11/29/2021
20012262	NEW CONSTR	446,897	12/09/2020
20004390	GARAGE	77,280	05/21/2020
B1429346	XFOB	0	09/01/2014
B26249	ADDITION	12,226	08/02/2012
MH5413	MH	0	06/15/2012

SALES DATA

OFF RECORD Number	DATE	TYPE INST	Q U	V I	RSN CD	SALE PRICE
1918/1205	5/22/2014	WD	Q	I	01	173,000
GRANTOR: CONNER JIMMIE R						
GRANTEE: SMITH KIMBERLY JO						
0807/1834	9/29/1997	PR	U	V	01	100
GRANTOR: CONNER JIMMIE R P/R						
GRANTEE: CONNER JIMMIE R						

BUILDING NOTES

BUILDING DIMENSIONS

BAS=[YR=2020] W40 S40 E40 N40$.

EXTRA FEATURES

LN	OB/XF CODE	DESCRIPTION	BLD	CAP	L	W	UNITS	UT	Adj R	ADJ UNIT PRICE	ORIG COND	YEAR ON	YEAR ACTUAL	Q	% COND	OB/XF MKT VALUE	NOTES
1	0510	GARAGE WD-	0	0	20	15	300.00	SF	35.00	35.00	100	2012	2012	3	68	7,140	
2	0351	CARPORT MT	0	0	0	0	1,020.00	SF	10.00	10.00	100	2012	2012	3	55	5,610	
3	0681	POLE SHED	0	0	50	48	2,400.00	SF	15.00	15.00	100	2014	2014	3	75	27,000	
4	1242	WD DECK A	0	100	0	0	200.00	SF	10.00	10.00	100	2020	2020	3	90	1,800	
5	0504	FP-ELECTRI	0	100	0	0	2.00	UT	2,000.00	2,000.00	100	2021	2021	3	99	3,960	
6	0812	CONCRETE C	0	100	0	0	5,009.00	SF	4.00	4.00	100	2021	2021	3	99	19,836	

LAND DESCRIPTION

TOTAL OB/XF 65,346

LN	USE CODE	CLS	LAND USE DESCRIPTION	CAP	RD	LOC ZONE	FRONT	DEPTH	TOT LND UTS	UNIT TYPE	DT	DPTH FACT	% COND	TOT ADJ	UNIT PRICE	ADJ UNIT PRICE	LAND VALUE	OTHER ADJUSTMENTS AND NOTES	YEAR	DENSITY	DECL	FRZ	YR	CONSRV
1	005000	C	RURAL HOME	100	0005	OR	0.00	0.00	1.00	AC		1.00	1.00	1.00	30,000.00	30,000.00	30,000							
2	005010	A	SVCE ACRGE	0		OR	0.00	0.00	1.00	AC		1.00	1.00	1.00	500.00	500.00	500							
3	005501	A	TIMB2-2 SI	0		OR	0.00	0.00	43.76	AC		1.00	1.00	1.00	545.00	545.00	23,849							
4	005902	A	HARDWOOD SI	0		OR	0.00	0.00	4.91	AC		1.00	1.00	1.00	190.00	190.00	933							
5	006000	A	PAST1/HAY	0		OR	0.00	0.00	17.00	AC		1.00	1.00	1.00	370.00	370.00	6,290							
6	009910	M	MKT.VAL.AG	0		OR	0.00	0.00	66.67	AC		1.00	1.00	0.60	5,000.00	3,000.00	200,010							

REVIEW DATE 05/31/2022 BY TW Total Acres: 67.67 Total Land Value: 61,572 Market: 200,010 Agricultural: 31,572 Common: 30,000 PRINTED 08/06/2024 BY SYS

PT E1/2 & PT NW1/4 OF
SEC 34-2N-23E IN OR 1919/1205
(EX UTIL ESMT IN OR 1795/1500)

SMITH KIMBERLY JO
18811 CONNER RD
HILLIARD, FL 32046

2024

34-2N-23-0000-0002-0000

NASSAU COUNTY PROPERTY

BUILDING CHARACTERISTICS

ELEMENT	CD	CONSTRUCTION
Exterior Wall	31	HARDIE BRD 100
Roof Structur	08	IRREGULAR 100
Roof Cover	12	MODULAR MT 100
Interior Wall	05	DRYWALL 100
Interior Floo	12	HARDWOOD 80
Interior Floo	11	CLAY TILE 20
Air Condition	03	CENTRAL 100
Heating Type	04	AIR DUCTED 100
Bedrooms		3 100
Bathrooms		2.5 100
Frame	02	WOOD FRAME 100
Stories	0	0 100
Units		0 100
Occupancy	00	NONE 100
Quality	04	Quality Level 04
DOR CODE	5500	TIMBERLAND 80-89
MAP NUM		MKT AREA 09
NEIGHBORHOOD/LOC	9001.00	

AREA TYPE	TOTAL GROSS AREA	PCT OF BASE	TOT ADJ AREA	SUBAREA MARKET VALUE
BAS	2,006	100	2,006	272,549
FGR	1,008	55	554	75,271
FOP	121	30	36	4,891
FOP	272	30	82	11,141
FOP	272	30	82	11,141
FUS	1,050	100	1,050	142,661
STR	40	10	4	543
STR	77	10	8	1,087
UAT	468	10	47	6,386
TOTALS	5,314		3,869	525,670

MARKET ADJUSTMENTS

TYPE	MDL	EFF. AREA	TOT ADJ PTS	EFF. BASE RATE	REPL. COST NEW	AYB	EYB	ECON	FNCT		NORM	% COND
0900	01	3,869	109.2420	136.55	528,312	2021	2021	0	0	0	0.50	99.50

3 SNGL FAM – 100% - 2021 Heated Area: 3056 HX Base Yr 2021

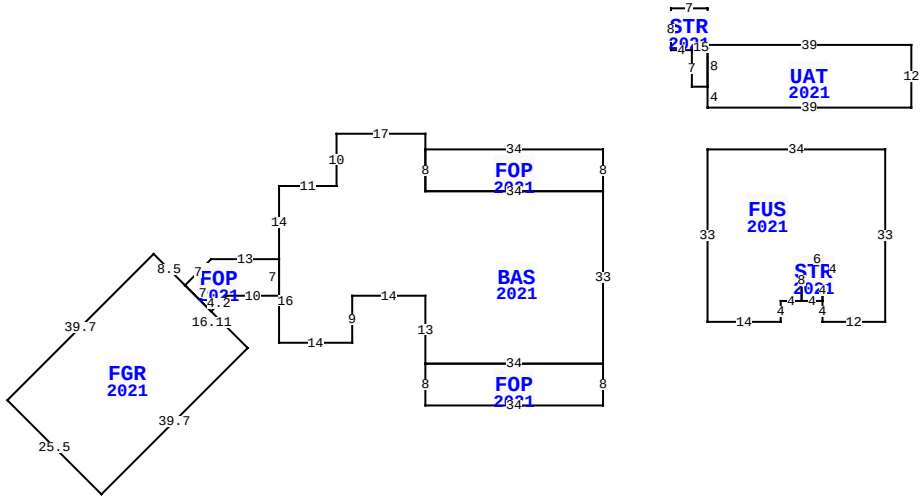

BLD DATE		LGL DATE	
XF DATE		LAND DATE	06/13/2023 MLU
INC DATE		AG DATE	

18811 CONNER RD, HILLIARD

VALUATION SUMMARY

VALUATION BY		STANDARD
Tax Group: 6	Tax Dist:	
BUILDING MARKET VALUE		562,623
TOTAL MARKET OB/XF VALUE		65,346
TOTAL LAND VALUE - MARKET		230,010
TOTAL MARKET VALUE		689,541
SOH/AGL Deduction		34,356
ASSESSED VALUE		655,185
TOTAL EXEMPTION VALUE	HX HB	50,000
BASE TAXABLE VALUE		605,185
TOTAL JUST VALUE		857,979
NCON VALUE		0
INCOME VALUE		
PREVIOUS YEAR MKT VALUE		836,782

PERMIT NUM	DESCRIPTION	AMT	ISSUED
MH5413	MH MOVE-ON	0	05/01/2012
E25048	ELEC OTHER	0	05/01/2012
M17225	AC/MH	0	05/01/2012
P15930	OTHER	0	05/01/2012

SALES DATA

OFF RECORD Number	DATE	TYPE INST	Q / U	V / I	RSN CD	SALE PRICE
1918/1205	5/22/2014	WD	Q	I	01	173,000
GRANTOR: CONNER JIMMIE R						
GRANTEE: SMITH KIMBERLY JO						
0807/1834	9/29/1997	PR	U	V	01	100
GRANTOR: CONNER JIMMIE R P/R						
GRANTEE: CONNER JIMMIE R						

BUILDING NOTES

BUILDING DIMENSIONS

FOP=[YR=2021] W34 BAS=[YR=2021] N3 W17 S10 W11 S14
FOP=[YR=2021] W13 D5 L5 FGR=[YR=2021] U6 L6 D28 L28
D18 R18 U28 R28 U12 L12 $ D5 R5 U3 R3 E10 N7$ S16 E14
N9 E14 S13 FOP=[YR=2021] S8 E34 N8 W34$ E34 N33 W34 N8$ S8
E34 N8$ PTR=E20 FUS=[YR=2021] E34 S33 W12 N4 STR=[YR=2021] W4
N8 E6 S4 W2 S4$ N4 E2 N4 W6 S8 W4 S4 W14 N33$ PTR=N20
UAT=[YR=2021] E39 S12 W39 N4 STR=[YR=2021] W3 N7 W4 N8 E7
S15$ N8 $ S20$ W20$.

EXTRA FEATURES

L N	OB/XF CODE	DESCRIPTION	BLD	CAP	L	W	UNITS	UT	Adj R	ADJ UNIT PRICE	ORIG COND	YEAR ON	YEAR ACTUAL	Q	% COND	OB/XF MKT VALUE	NOTES

LAND DESCRIPTION

TOTAL OB/XF 0

L N	USE CODE	CLS	LAND USE DESCRIPTION	CAP	R D	LOC ZONE	FRONT	DEPTH	TOT LND UTS	UNIT TYPE	D T	DPTH FACT	% COND	TOT ADJ	UNIT PRICE	ADJ UNIT PRICE	LAND VALUE	OTHER ADJUSTMENTS AND NOTES	YEAR	DENSITY	DECL	FRZ	YR	CONSRV

REVIEW DATE 05/31/2022 BY TW Total Acres: 67.67 Total Land Value: 61,572 Market: 200,010 Agricultural: 31,572 Common: 30,000 PRINTED 08/06/2024 BY SYS