PT OF LOT 1 &
ALL OF LOTS 1 & 4
MONICA ESTATES PB 5/317

CHRISTENSEN KENNETH J & TANYA
28166 RAYNA LN
HILLIARD, FL 32046-7249

2024

32-4N-24-2020-0001-0000

NASSAU COUNTY PROPERTY

BUILDING CHARACTERISTICS

ELEMENT	CD	CONSTRUCTION
Exterior Wall	25	MOD METAL 100
Roof Structur	03	GABLE/HIP 100
Roof Cover	12	MODULAR MT 100
Interior Wall	07	NONE 60
Interior Wall	06	CUST PANEL 40
Interior Floo	09	PINE WOOD 100
Air Condition	03	CENTRAL 100
Heating Type	04	AIR DUCTED 100
Bedrooms		0 100
Bathrooms		1 100
Frame	02	WOOD FRAME 100
Stories	1.	1. 100
Units		0 100
Occupancy	00	NONE 100
Quality	02	Quality Level 02

DOR CODE	0100	SINGLE FAMILY	
MAP NUM		MKT AREA	09
NEIGHBORHOOD/LOC	9001.00		

AREA TYPE	TOTAL GROSS AREA	PCT OF BASE	TOT ADJ AREA	SUBAREA MARKET VALUE
BAS	2,220	100	2,220	62,451
BAS	132	100	132	3,714
BAS	416	100	416	11,702
BAS	480	100	480	13,503
GOF	64	125	80	2,251
UUS	432	50	216	6,076
TOTALS	3,744		3,544	99,698

MARKET ADJUSTMENTS

TYPE	MDL	EFF. AREA	TOT ADJ PTS	EFF. BASE RATE	REPL. COST NEW	AYB	EYB	ECON	FNCT		NORM	% COND
0150	01	3,544	64.2960	32.15	113,940	1993	1998	0	0	0	12.50	87.50

1 ACCESORY U – 100% - 2009 Heated Area: 3312 HX Base Yr 2009

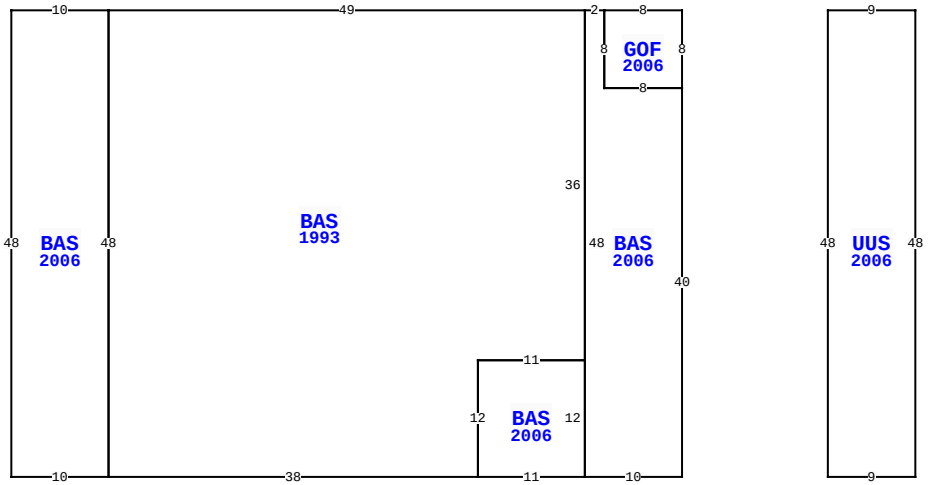

BLD DATE	03/03/2023	NW	LGL DATE
XF DATE			LAND DATE 06/16/2023 MLU
INC DATE			AG DATE

28166 RAYNA LN, HILLIARD

VALUATION SUMMARY

VALUATION BY		STANDARD
Tax Group: 4	Tax Dist:	
BUILDING MARKET VALUE		517,636
TOTAL MARKET OB/XF VALUE		39,371
TOTAL LAND VALUE - MARKET		132,620
TOTAL MARKET VALUE		689,627
SOH/AGL Deduction		283,967
ASSESSED VALUE		405,660
TOTAL EXEMPTION VALUE	HX HB	50,000
BASE TAXABLE VALUE		355,660
TOTAL JUST VALUE		689,627
NCON VALUE		0
INCOME VALUE		
PREVIOUS YEAR MKT VALUE		673,925

PERMIT NUM	DESCRIPTION	AMT	ISSUED
B974090	GARAGE	20,400	07/01/1997

SALES DATA

OFF RECORD Number	DATE	TYPE INST	Q / U	V / I	RSN CD	SALE PRICE
1483/0869	3/07/2007	WD	Q	I		627,000
GRANTOR: FRANKLIN MICHAEL C &						
GRANTEE: CHRISTENSEN KENNETH						
0806/0772	9/15/1997	QC	U	V	09	13,500
GRANTOR: WEBB LAMONTA FRANKLIN						
GRANTEE: FRANKLIN MICHAEL C						

EXTRA FEATURES

L N	OB/XF CODE	DESCRIPTION	BLD	CAP	L	W	UNITS	UT	Adj R	ADJ UNIT PRICE	ORIG COND	YEAR ON	YEAR ACTUAL	Q	% COND	OB/XF MKT VALUE	NOTES
1	0812	CONCRETE C	0	100	0	0	1,443.00	SF	4.00	4.00	100	1994	1994	3	68	3,925	
2	0500	FP-PRE FAB	0	100	0	0	1.00	UT	3,500.00	3,500.00	100	1994	1994	3	76	2,660	
3	1128	BRICK 12"	0	100	0	0	224.00	SF	14.00	14.00	100	1994	1994	3	90	2,822	
4	0812	CONCRETE C	0	100	0	0	4,429.00	SF	4.00	4.00	100	1997	1997	3	73	12,933	
5	0940	SHEDS/PORT	0	100	12	12	144.00	SF	30.00	30.00	100	1994	1994	3	20	864	
6	0940	SHEDS/PORT	0	100	13	8	104.00	SF	30.00	30.00	100	1998	1998	3	20	624	
7	0845	KOOL DECK	0	100	0	0	1,894.00	SF	7.25	7.25	100	1999	1999	3	77	10,573	
8	0803	ASPHALT C	0	100	0	0	4,970.00	SF	2.00	2.00	100	1999	1999	3	50	4,970	

BUILDING NOTES

BUILDING DIMENSIONS

GOF=[YR=2006] W8BAS=[YR=2006] W 2 BAS=[YR=1993] W49
BAS=[YR=2006] W10S48 E10 N48 $ S48 E38 BAS=[YR=2006] E11 N12
W11 S12 $N12 E11 N36 $ S48 E10 N40W8N8$S8E8N8 $ PTR= E15
UUS=[YR=2006] E9 S48 W9 N48 $ W15 $.

LAND DESCRIPTION

TOTAL OB/XF 39,371

L N	USE CODE	CLS	LAND USE DESCRIPTION	CAP	R D	LOC ZONE	FRONT	DEPTH	TOT LND UTS	UNIT TYPE	D T	DPTH FACT	% COND	TOT ADJ	UNIT PRICE	ADJ UNIT PRICE	LAND VALUE	OTHER ADJUSTMENTS AND NOTES	YEAR	DENSITY	DECL	FRZ	YR	CONSRV
1	000115	C	SFR ACRES	100		OR	0.00	0.00	6.98	AC		1.00	1.00	1.00	19,000.00	19,000.00	132,620							

REVIEW DATE 05/12/2019 BY KBA Total Acres: 6.98 Total Land Value: 132,620 Market: 0 Agricultural: 0 Common: 132,620 PRINTED 08/06/2024 BY SYS

PT OF LOT 1 &
ALL OF LOTS 1 & 4
MONICA ESTATES PB 5/317

CHRISTENSEN KENNETH J & TANYA
28166 RAYNA LN
HILLIARD, FL 32046-7249

2024

32-4N-24-2020-0001-0000

BUILDING CHARACTERISTICS

ELEMENT	CD	CONSTRUCTION
Exterior Wall	20	FACE BRICK 100
Roof Structur	03	GABLE/HIP 100
Roof Cover	03	COMP SHNGL 100
Interior Wall	05	DRYWALL 100
Interior Floo	13	LVT/LAMNT 50
Interior Floo	14	CARPET 50
Air Condition	03	CENTRAL 100
Heating Type	04	AIR DUCTED 100
Bedrooms		3 100
Bathrooms		3 100
Frame	02	WOOD FRAME 100
Stories	1.	1. 100
Units		0 100
Occupancy	00	NONE 100
Quality	02	Quality Level 02
DOR CODE	0100	SINGLE FAMILY
MAP NUM		MKT AREA 09
NEIGHBORHOOD/LOC	9001.00	

AREA TYPE	TOTAL GROSS AREA	PCT OF BASE	TOT ADJ AREA	SUBAREA MARKET VALUE
BAS	2,941	100	2,941	249,119
FOP	36	30	11	932
FSP	252	40	101	8,555
FSP	478	40	191	16,179
SFB	598	80	478	40,490
SFB	1,271	80	1,017	86,145
UGR	434	45	195	16,518
TOTALS	6,010		4,934	417,938

MARKET ADJUSTMENTS

TYPE	MDL	EFF. AREA	TOT ADJ PTS	EFF. BASE RATE	REPL. COST NEW	AYB	EYB	ECON	FNCT		NORM	% COND
0900	01	4,934	86.6020	108.25	534,106	1994	1994	0	0	0	21.75	78.25

2 SNGL FAM – 100% - 2009 Heated Area: 4436 HX Base Yr 2009

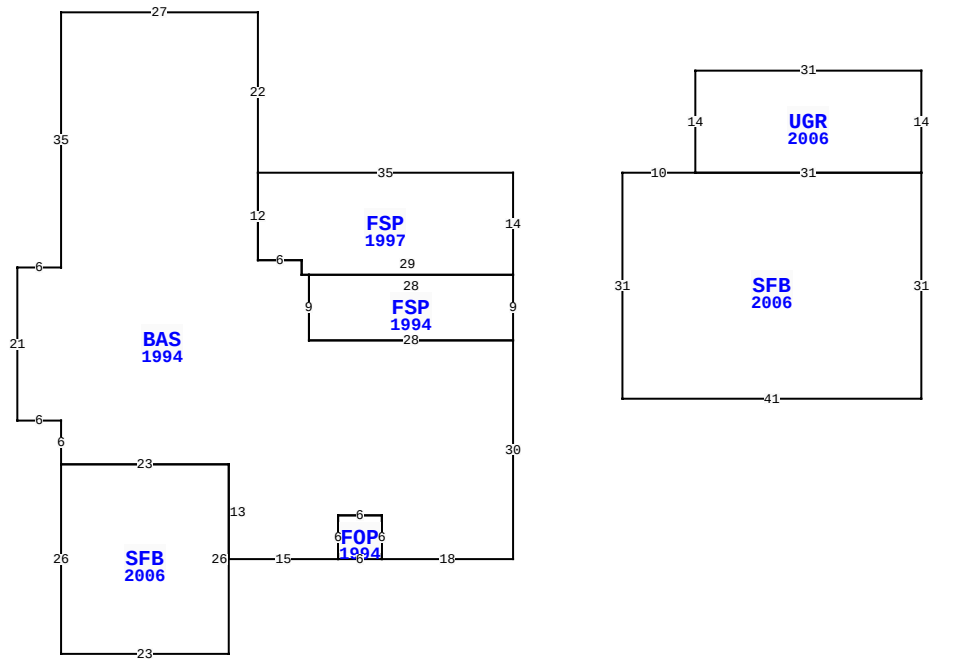

28166 RAYNA LN, HILLIARD

BLD DATE	03/03/2023 NW	LGL DATE	
XF DATE		LAND DATE	06/16/2023 MLU
INC DATE		AG DATE	

NASSAU COUNTY PROPERTY

PAGE 2 of 2 4

VALUATION SUMMARY

VALUATION BY		STANDARD
Tax Group: 4	Tax Dist:	
BUILDING MARKET VALUE		517,636
TOTAL MARKET OB/XF VALUE		39,371
TOTAL LAND VALUE - MARKET		132,620
TOTAL MARKET VALUE		689,627
SOH/AGL Deduction		283,967
ASSESSED VALUE		405,660
TOTAL EXEMPTION VALUE	HX HB	50,000
BASE TAXABLE VALUE		355,660
TOTAL JUST VALUE		689,627
NCON VALUE		0
INCOME VALUE		
PREVIOUS YEAR MKT VALUE		673,925

PERMIT NUM	DESCRIPTION	AMT	ISSUED

SALES DATA

OFF RECORD Number	DATE	TYPE INST	Q / U	V / I	RSN CD	SALE PRICE
1483/0869	3/07/2007	WD	Q	I		627,000
GRANTOR: FRANKLIN MICHAEL C &						
GRANTEE: CHRISTENSEN KENNETH						
0806/0772	9/15/1997	QC	U	V	09	13,500
GRANTOR: WEBB LAMONTA FRANKLIN						
GRANTEE: FRANKLIN MICHAEL C						

BUILDING NOTES

BUILDING DIMENSIONS

FSP=[YR=1997] W35 BAS=[YR=1994] N22 W27 S35 W6 S21 E6 S6 SFB=[YR=2006] S26 E23 N26 W23 $ E23 S13 E15 FOP=[YR=1994] E6 N6 W6 S6 $ N6 E6 S6 E18 N30 FSP=[YR=1994] N9 W28 S9 E28 $ W28 N9 W1 N2 W6 N12 $ S12 E6 S2 E29 N14 $ PTR= E15 SFB=[YR=2006] E10 UGR=[YR=2006] N14 E31 S14 W31$ E31 S31 W41 N31$ W15$.

EXTRA FEATURES

L N	OB/XF CODE	DESCRIPTION	BLD	CAP	L	W	UNITS	UT	Adj R	ADJ UNIT PRICE	ORIG COND	YEAR ON	YEAR ACTUAL	Q	% COND	OB/XF MKT VALUE	NOTES

LAND DESCRIPTION

TOTAL OB/XF 0

L N	USE CODE	CLS	LAND USE DESCRIPTION	CAP	R D	LOC ZONE	FRONT	DEPTH	TOT LND UTS	UNIT TYPE	D T	DPTH FACT	% COND	TOT ADJ	UNIT PRICE	ADJ UNIT PRICE	LAND VALUE	OTHER ADJUSTMENTS AND NOTES	YEAR	DENSITY	DECL	FRZ	YR	CONSRV

REVIEW DATE 05/12/2019 BY KBA Total Acres: 6.98 Total Land Value: 132,620 Market: 0 Agricultural: 0 Common: 132,620 PRINTED 08/06/2024 BY SYS