LOT 11
AMELIA BAY ESTATES PB 7/4

DUNHAM BRUCE & DEBORAH S
95313 BROOKHILL PL
FERNANDINA BEACH, FL 32034

2024

32-2N-28-005A-0011-0000

BUILDING CHARACTERISTICS

ELEMENT	CD	CONSTRUCTION
Exterior Wall	31	HARDIE BRD 100
Roof Structur	08	IRREGULAR 100
Roof Cover	03	COMP SHNGL 100
Interior Wall	05	DRYWALL 100
Interior Floo	12	HARDWOOD 90
Interior Floo	11	CLAY TILE 10
Air Condition	03	CENTRAL 100
Heating Type	04	AIR DUCTED 100
Bedrooms		5 100
Bathrooms		2.5 100
Frame	02	WOOD FRAME 100
Stories	1.5	1.5 100
Units		0 100
Quality	04	Quality Level 04
DOR CODE	0100	SINGLE FAMILY
MAP NUM		MKT AREA 04
NEIGHBORHOOD/LOC	4008.00	

AREA TYPE	TOTAL GROSS AREA	PCT OF BASE	TOT ADJ AREA	SUBAREA MARKET VALUE
BAS	2,615	100	2,615	542,090
FGR	541	55	298	61,775
FOP	162	30	49	10,158
FOP	196	30	59	12,231
FUS	378	100	378	78,359
PTO	518	5	26	5,390
STR	60	10	6	1,244
TOTALS	4,470		3,431	711,246

MARKET ADJUSTMENTS

TYPE	MDL	EFF. AREA	TOT ADJ PTS	EFF. BASE RATE	REPL. COST NEW	AYB	EYB	ECON	FNCT		NORM	% COND
0500	11	3,431	138.1987	207.30	711,246	2023	2023	0	0	0	0.00	100.00

1 SFR CUST – 100% - 2024 Heated Area: 2993 HX Base Yr 2024

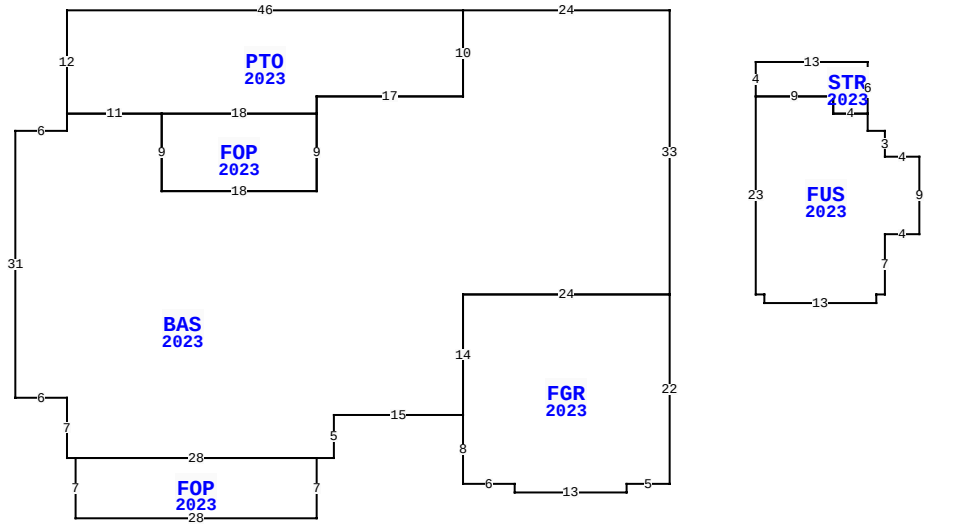

95313 BROOKHILL PL, FERNANDINA BEACH

BLD DATE		LGL DATE	
XF DATE		LAND DATE	03/12/2024 MLU
INC DATE		AG DATE	

NASSAU COUNTY PROPERTY

PAGE 1 of 1 4

VALUATION SUMMARY

VALUATION BY		STANDARD
Tax Group: 4	Tax Dist:	
BUILDING MARKET VALUE		711,246
TOTAL MARKET OB/XF VALUE		23,100
TOTAL LAND VALUE - MARKET		90,000
TOTAL MARKET VALUE		824,346
SOH/AGL Deduction		0
ASSESSED VALUE		824,346
TOTAL EXEMPTION VALUE	HX HB	50,000
BASE TAXABLE VALUE		774,346
TOTAL JUST VALUE		824,346
NCON VALUE		734,346
INCOME VALUE		
PREVIOUS YEAR MKT VALUE		75,000

PERMIT NUM	DESCRIPTION	AMT	ISSUED
20004087	CO		04/05/2023
B201514	NEW CONSTR	401,713	02/26/2020

SALES DATA

OFF RECORD Number	DATE	TYPE INST	Q / U	V / I	RSN CD	SALE PRICE
2631/792	4/13/2023	WD	Q	I	02	887,571
GRANTOR: STAR CONSTRUCTION &						
GRANTEE: DUNHAM BRUCE & DEBO						
2203/1744	6/15/2018	WD	Q	V	01	50,000
GRANTOR: 16B SOUTHERN OAKS LLC						
GRANTEE: STAR CONSTRUCTION A						

BUILDING NOTES

EXTRA FEATURES

L N	OB/XF CODE	DESCRIPTION	BLD	CAP	L	W	UNITS	UT	Adj R	ADJ UNIT PRICE	ORIG COND	YEAR ON	YEAR ACTUAL	Q	% COND	OB/XF MKT VALUE	NOTES
1	0855	CONC PAVER	0	100	0	0	1,700.00	SF	10.00	10.00	100	2023	2023		100	17,000	
2	0855	CONC PAVER	0	100	0	0	260.00	SF	10.00	10.00	100	2023	2023		100	2,600	
3	0500	FP-PRE FAB	0	100	0	0	1.00	UT	3,500.00	3,500.00	100	2023	2023		100	3,500	

BUILDING DIMENSIONS

BAS=[YR=2023;ORIG=90,0] W24 S10 W17 S2 S9 W18 N9 W11 S2 W6 S31 E6 S7 E1 E28 E2 N5 E15 N14 E24 N33 $
FOP=[YR=2023;ORIG=49,12] W18 S9 E18 N9 $
FOP=[YR=2023;ORIG=21,52] E28 S7 W28 N7 $
FGR=[YR=2023;ORIG=66,33] S14 S8 E6 S1 E13 N1 E5 N22 W24 $
PTO=[YR=2023;ORIG=20,0] E46 S10 W17 S2 W18 W11 N12 $
FUS=[YR=2023;ORIG=100,10] S23 E1 S1 E13 N1 E1 N7 E4 N9 W4 N3 W2 N2 W4 N2 W9 $
STR=[YR=2023;ORIG=100,6] E13 S6 W4 N2 W9 N4 $
.

LAND DESCRIPTION

TOTAL OB/XF 23,100

L N	USE CODE	CLS	LAND USE DESCRIPTION	CAP	R D	LOC ZONE	FRONT	DEPTH	TOT LND UTS	UNIT TYPE	D T	DPTH FACT	% COND	TOT ADJ	UNIT PRICE	ADJ UNIT PRICE	LAND VALUE	OTHER ADJUSTMENTS AND NOTES	YEAR	DENSITY	DECL	FRZ	YR	CONSRV
1	000100	C	SFR	100		OR	0.00	0.00	1.00	LT		1.00	1.00	1.00	90,000.00	90,000.00	90,000							

REVIEW DATE 05/15/2023 BY MLU Total Acres: 0.00 Total Land Value: 90,000 Market: 0 Agricultural: 0 Common: 90,000 PRINTED 08/06/2024 BY SYS