PT OF LOT 63 (S-1)
IN OR 2701/414
CORNWALL SURVEY

**FENSTERMAKER KENNETH L & CATHY SUE**
25068 BLUE JAY WAY
HILLIARD, FL 32046

**2024**

**30-3N-24-2020-0063-0010**

## BUILDING CHARACTERISTICS

| ELEMENT | CD | CONSTRUCTION |
|---|---|---|
| Exterior Wall | 20 | FACE BRICK 100 |
| Roof Structur | 03 | GABLE/HIP 100 |
| Roof Cover | 03 | COMP SHNGL 100 |
| Interior Wall | 05 | DRYWALL 100 |
| Interior Floo | 13 | LVT/LAMNT 60 |
| Interior Floo | 14 | CARPET 40 |
| Air Condition | 03 | CENTRAL 100 |
| Heating Type | 04 | AIR DUCTED 100 |
| Bedrooms | | 3 100 |
| Bathrooms | | 2 100 |
| Frame | 02 | WOOD FRAME 100 |
| Stories | 1. | 1. 100 |
| Units | | 0 100 |
| Occupancy | 00 | NONE 100 |
| Quality | 01 | Quality Level 01 |
| DOR CODE | 0100 | SINGLE FAMILY |
| MAP NUM | | MKT AREA 09 |
| NEIGHBORHOOD/LOC | 9001.00 | |

| AREA TYPE | TOTAL GROSS AREA | PCT OF BASE | TOT ADJ AREA | SUBAREA MARKET VALUE |
|---|---|---|---|---|
| BAS | 2,003 | 100 | 2,003 | 249,282 |
| FGR | 525 | 55 | 289 | 35,967 |
| FOP | 42 | 30 | 13 | 1,618 |
| FSP | 196 | 40 | 78 | 9,707 |
| UDU | 187 | 55 | 103 | 12,819 |
| TOTALS | 2,953 | | 2,486 | 309,393 |

## MARKET ADJUSTMENTS

| TYPE | MDL | EFF. AREA | TOT ADJ PTS | EFF. BASE RATE | REPL. COST NEW | AYB | EYB | ECON | FNCT | | NORM | % COND |
|---|---|---|---|---|---|---|---|---|---|---|---|---|
| 0500 | 01 | 2,486 | 93.4848 | 140.23 | 348,612 | 2008 | 2008 | 0 | 0 | 0 | 11.25 | 88.75 |

1 SFR CUST – 100% - 2009 Heated Area: 2003 HX Base Yr 2009

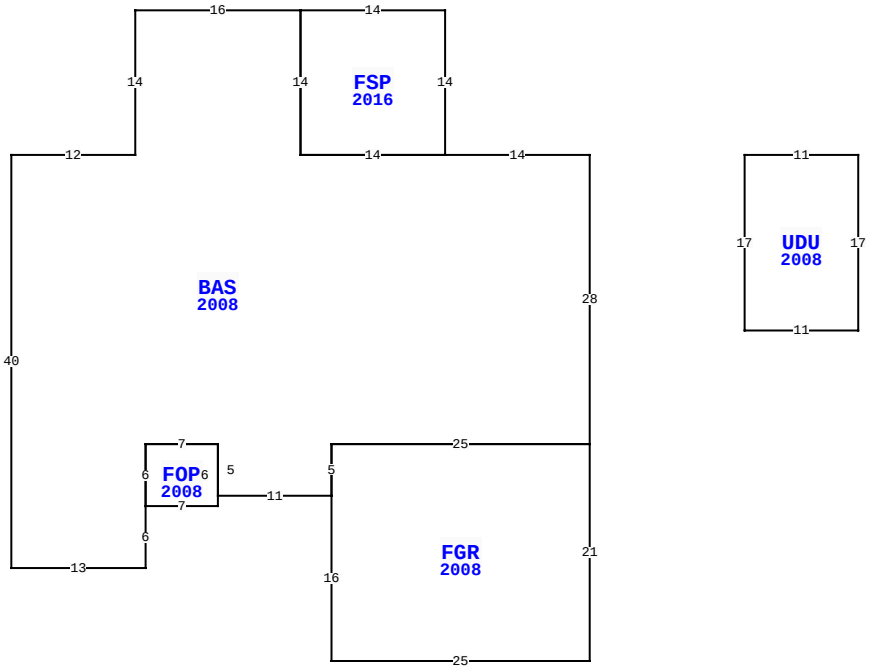


25068 BLUE JAY WAY, HILLIARD

| | | | |
|---|---|---|---|
| BLD DATE | | LGL DATE | |
| XF DATE | | LAND DATE | 06/13/2023 MLU |
| INC DATE | | AG DATE | |

## NASSAU COUNTY PROPERTY

PAGE 1 of 2 4

### VALUATION SUMMARY

| | | |
|---|---|---|
| VALUATION BY | | STANDARD |
| Tax Group: 4 | Tax Dist: | |
| BUILDING MARKET VALUE | | 326,875 |
| TOTAL MARKET OB/XF VALUE | | 3,869 |
| TOTAL LAND VALUE - MARKET | | 78,000 |
| TOTAL MARKET VALUE | | 408,744 |
| SOH/AGL Deduction | | 210,898 |
| ASSESSED VALUE | | 197,846 |
| TOTAL EXEMPTION VALUE | HX HB | 50,000 |
| BASE TAXABLE VALUE | | 147,846 |
| TOTAL JUST VALUE | | 408,744 |
| NCON VALUE | | 0 |
| INCOME VALUE | | |
| PREVIOUS YEAR MKT VALUE | | 357,415 |

| PERMIT NUM | DESCRIPTION | AMT | ISSUED |
|---|---|---|---|
| 19002177 | REPAIR/RRF | 11,468 | 03/04/2019 |
| B166513 | GARAGE | 0 | 12/01/2016 |
| M13531 | MECH OTHER | 0 | 12/01/2007 |
| C20500 | CO ISSUED | 165,000 | 09/01/2007 |
| B20500 | NEW CONSTR | 165,000 | 09/01/2007 |
| E20031 | ELEC OTHER | 3,500 | 09/01/2007 |

## SALES DATA

| OFF RECORD Number | DATE | TYPE INST | Q / U | V / I | RSN CD | SALE PRICE |
|---|---|---|---|---|---|---|
| 2701/414 | 3/08/2024 | WD | Q | I | 01 | 515,000 |
| GRANTOR: HERN JOHN R & HEATHER | | | | | | |
| GRANTEE: FENSTERMAKER KENNET | | | | | | |
| 1496/1057 | 5/02/2007 | WD | Q | V | | 46,600 |
| GRANTOR: WILKINSON JOHN M | | | | | | |
| GRANTEE: HERN JOHN R & HEATH | | | | | | |

## BUILDING NOTES

## BUILDING DIMENSIONS

BAS=[YR=2008] W14 FSP=[YR=2016] N14 W14 S14 E14$ W14 N14 W16 S14 W12 S40E13 N6 FOP=[YR=2008] E7 N6 W7 S6 $ N6 E7 S5 E11 FGR=[YR=2008] S16 E25 N21 W25 S5$ N5 E25 N28$ PTR= E15 UDU=[YR=2008] E11 S17 W11 N17$ W15$.

## EXTRA FEATURES

| LN | OB/XF CODE | DESCRIPTION | BLD | CAP | L | W | UNITS | UT | Adj R | ADJ UNIT PRICE | ORIG COND | YEAR ON | YEAR ACTUAL | Q | % COND | OB/XF MKT VALUE | NOTES |
|---|---|---|---|---|---|---|---|---|---|---|---|---|---|---|---|---|---|
| 1 | 0811 | CONCRETE B | 0 | 100 | 0 | 0 | 836.00 | SF | 5.20 | 5.20 | 100 | 2008 | 2008 | 3 | 89 | 3,869 | |

## LAND DESCRIPTION

TOTAL OB/XF 3,869

| LN | USE CODE | CLS | LAND USE DESCRIPTION | CAP | RD | LOC ZONE | FRONT | DEPTH | TOT LND UTS | UNIT TYPE | DT | DPTH FACT | % COND | TOT ADJ | UNIT PRICE | ADJ UNIT PRICE | LAND VALUE | OTHER ADJUSTMENTS AND NOTES | YEAR | DENSITY | DECL | FRZ | YR | CONSRV |
|---|---|---|---|---|---|---|---|---|---|---|---|---|---|---|---|---|---|---|---|---|---|---|---|---|
| 1 | 000115 | C | SFR ACRES | 100 | 0004 | OR | 0.00 | 0.00 | 2.60 | AC | | 1.00 | 1.00 | 1.00 | 30,000.00 | 30,000.00 | 78,000 | | | | | | | |

REVIEW DATE 05/01/2024 BY WWA Total Acres: 2.60 Total Land Value: 78,000 Market: 0 Agricultural: 0 Common: 78,000 PRINTED 08/06/2024 BY SYS

PT OF LOT 63 (S-1)
IN OR 2701/414
CORNWALL SURVEY

FENSTERMAKER KENNETH L & CATHY SUE
25068 BLUE JAY WAY
HILLIARD, FL 32046

**2024**

**30-3N-24-2020-0063-0010**

## NASSAU COUNTY PROPERTY



## BUILDING CHARACTERISTICS

| ELEMENT | CD | CONSTRUCTION |
|---|---|---|
| Exterior Wall | 25 | MOD METAL 100 |
| Roof Structur | 10 | STEEL FRME 100 |
| Roof Cover | 12 | MODULAR MT 100 |
| Interior Wall | 07 | NONE 100 |
| Interior Floo | 03 | CONC FINSH 100 |
| Air Condition | 01 | NONE 100 |
| Heating Type | 01 | NONE 100 |
| Bedrooms | | 0 100 |
| Bathrooms | | 0 100 |
| Frame | 05 | STEEL 100 |
| Quality | 06 | Quality Level 06 |
| DOR CODE | 0100 | SINGLE FAMILY |
| MAP NUM | | MKT AREA 09 |
| NEIGHBORHOOD/LOC | 9001.00 | |

| AREA TYPE | TOTAL GROSS AREA | PCT OF BASE | TOT ADJ AREA | SUBAREA MARKET VALUE |
|---|---|---|---|---|
| BAS | 840 | 100 | 840 | 17,482 |
| TOTALS | 840 | | 840 | 17,482 |

## MARKET ADJUSTMENTS

| TYPE | MDL | EFF. AREA | TOT ADJ PTS | EFF. BASE RATE | REPL. COST NEW | AYB | EYB | ECON | FNCT | | NORM | % COND |
|---|---|---|---|---|---|---|---|---|---|---|---|---|
| 6500 | 01 | 840 | 63.2500 | 22.14 | 18,598 | 2017 | 2017 | 0 | 0 | 0 | 6.00 | 94.00 |

2 GARAGE RES – 100% - 2024 Heated Area: 840 HX Base Yr 2009

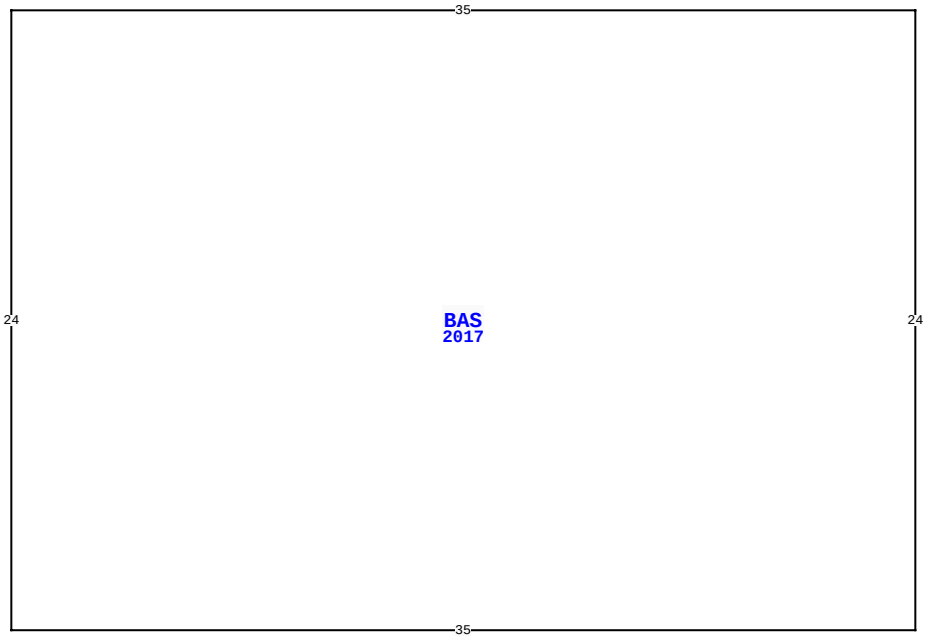


25068 BLUE JAY WAY, HILLIARD

| | | | |
|---|---|---|---|
| BLD DATE | | LGL DATE | |
| XF DATE | | LAND DATE | 06/13/2023 MLU |
| INC DATE | | AG DATE | |

## VALUATION SUMMARY

| | | |
|---|---|---|
| VALUATION BY | | STANDARD |
| Tax Group: 4 | Tax Dist: | |
| BUILDING MARKET VALUE | | 326,875 |
| TOTAL MARKET OB/XF VALUE | | 3,869 |
| TOTAL LAND VALUE - MARKET | | 78,000 |
| TOTAL MARKET VALUE | | 408,744 |
| SOH/AGL Deduction | | 210,898 |
| ASSESSED VALUE | | 197,846 |
| TOTAL EXEMPTION VALUE | HX HB | 50,000 |
| BASE TAXABLE VALUE | | 147,846 |
| TOTAL JUST VALUE | | 408,744 |
| NCON VALUE | | 0 |
| INCOME VALUE | | |
| PREVIOUS YEAR MKT VALUE | | 357,415 |

| PERMIT NUM | DESCRIPTION | AMT | ISSUED |
|---|---|---|---|
| P12720 | OTHER | 0 | 09/01/2007 |
| R10698 | REPAIR/RRF | 18,000 | 09/01/2007 |

## SALES DATA

| OFF RECORD Number | DATE | TYPE INST | Q U | V I | RSN CD | SALE PRICE |
|---|---|---|---|---|---|---|
| 2701/414 | 3/08/2024 | WD | Q | I | 01 | 515,000 |
| GRANTOR: HERN JOHN R & HEATHER | | | | | | |
| GRANTEE: FENSTERMAKER KENNET | | | | | | |
| 1496/1057 | 5/02/2007 | WD | Q | V | | 46,600 |
| GRANTOR: WILKINSON JOHN M | | | | | | |
| GRANTEE: HERN JOHN R & HEATH | | | | | | |

## BUILDING NOTES

## BUILDING DIMENSIONS

BAS=[YR=2017;ORIG=45,10] E35 S24 W35 N24 $
.

## EXTRA FEATURES

| L N | OB/XF CODE | DESCRIPTION | BLD | CAP | L | W | UNITS | UT | Adj R | ADJ UNIT PRICE | ORIG COND | YEAR ON | YEAR ACTUAL | Q | % COND | OB/XF MKT VALUE | NOTES |
|---|---|---|---|---|---|---|---|---|---|---|---|---|---|---|---|---|---|

## LAND DESCRIPTION

TOTAL OB/XF 0

| L N | USE CODE | CLS | LAND USE DESCRIPTION | CAP | R D | LOC ZONE | FRONT | DEPTH | TOT LND UTS | UNIT TYPE | D T | DPTH FACT | % COND | TOT ADJ | UNIT PRICE | ADJ UNIT PRICE | LAND VALUE | OTHER ADJUSTMENTS AND NOTES | YEAR | DENSITY | DECL | FRZ | YR | CONSRV |
|---|---|---|---|---|---|---|---|---|---|---|---|---|---|---|---|---|---|---|---|---|---|---|---|---|

REVIEW DATE 05/01/2024 BY WWA Total Acres: 2.60 Total Land Value: 78,000 Market: 0 Agricultural: 0 Common: 78,000 PRINTED 08/06/2024 BY SYS