IN OR 2710/2

VRMTG ASSET TRUST/US BANK TRUST NATIONAL ASSOCIATI
75 BEATTIE PL STE 300
GREENVILLE, SC 29601

2024

30-3N-24-0000-0002-0020

BUILDING CHARACTERISTICS

ELEMENT	CD	CONSTRUCTION
Exterior Wall	05	AVERAGE 100
Roof Structur	03	GABLE/HIP 100
Roof Cover	03	COMP SHNGL 100
Interior Wall	05	DRYWALL 90
Interior Wall	06	CUST PANEL 10
Interior Floo	09	PINE WOOD 100
Air Condition	03	CENTRAL 100
Heating Type	04	AIR DUCTED 100
Bedrooms		2 100
Bathrooms		1.5 100
Frame	02	WOOD FRAME 100
Stories	1.	1. 100
Units		0 100
BUD8 Adjustme	04	DIST 01 100
Occupancy	00	NONE 100
Quality	03	Quality Level 03
DOR CODE	0100	SINGLE FAMILY
MAP NUM		MKT AREA 09
NEIGHBORHOOD/LOC	9001.00	

AREA TYPE	TOTAL GROSS AREA	PCT OF BASE	TOT ADJ AREA	SUBAREA MARKET VALUE
BAS	1,772	100	1,772	129,971
FEP	256	80	205	15,036
FOP	25	30	8	587
FST	176	55	97	7,114
UGR	484	45	218	15,990
TOTALS	2,713		2,300	168,697

MARKET ADJUSTMENTS

TYPE	MDL	EFF. AREA	TOT ADJ PTS	EFF. BASE RATE	REPL. COST NEW	AYB	EYB	ECON	FNCT		NORM	% COND
0100	01	2,300	97.1180	92.26	212,198	1940	1970	0	0	0	20.50	79.50

1 SINGLE FAM – 100% - 1997 Heated Area: 1772 HX Base Yr 1997

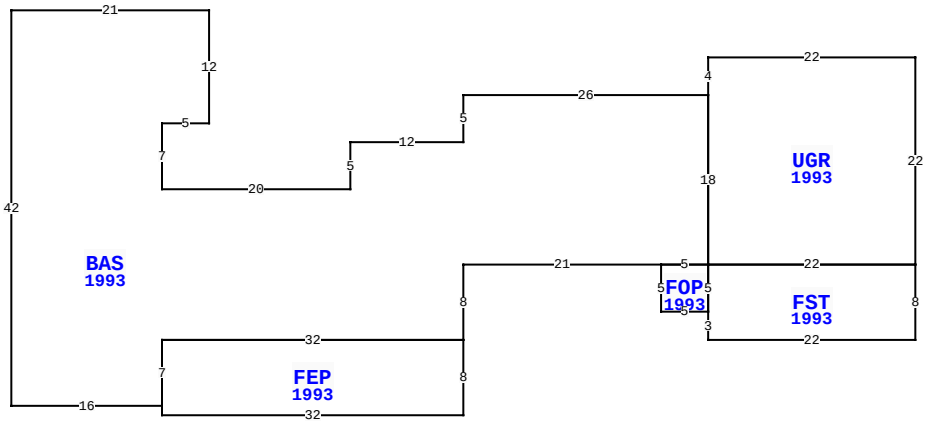

15462 CR 108, HILLIARD

BLD DATE		LGL DATE	
XF DATE		LAND DATE	06/13/2023 MLU
INC DATE		AG DATE	

NASSAU COUNTY PROPERTY

PAGE 1 of 1 4

VALUATION SUMMARY

VALUATION BY		STANDARD
Tax Group: 4	Tax Dist:	
BUILDING MARKET VALUE		168,697
TOTAL MARKET OB/XF VALUE		1,090
TOTAL LAND VALUE - MARKET		42,120
TOTAL MARKET VALUE		211,907
SOH/AGL Deduction		114,146
ASSESSED VALUE		97,761
TOTAL EXEMPTION VALUE	HX HB	50,000
BASE TAXABLE VALUE		47,761
TOTAL JUST VALUE		211,907
NCON VALUE		0
INCOME VALUE		
PREVIOUS YEAR MKT VALUE		203,982

PERMIT NUM	DESCRIPTION	AMT	ISSUED

SALES DATA

OFF RECORD Number	DATE	TYPE INST	Q / U	V / I	RSN CD	SALE PRICE
2710/2	5/06/2024	CT	U	I	18	130,500
GRANTOR: CLERK OF COURT						
GRANTEE: VRMTG ASSET TRUST						
1738/0345	5/09/2011	QC	U	I	11	100
GRANTOR: HERBST PATRICIA						
GRANTEE: KLAWONN GAYLEN						

BUILDING NOTES

BUILDING DIMENSIONS

UGR=[YR=1993] W22 S4 BAS=[YR=1993] W26 S5 W12 S5 W20 N7 E5 N12 W21 S42 E16 FEP=[YR=1993] S1 E32 N8 W32 S7 $ N7 E32 N8 E21 FOP=[YR=1993] S5 E5 FST=[YR=1993] S3 E22 N8 W22 S5 $ N5 W5$ E5 N18 $S18 E22 N22 $.

EXTRA FEATURES

LN	OB/XF CODE	DESCRIPTION	BLD	CAP	L	W	UNITS	UT	Adj R	ADJ UNIT PRICE	ORIG COND	YEAR ON	YEAR ACTUAL	Q	% COND	OB/XF MKT VALUE	NOTES
1	0803	ASPHALT C	0	100	0	0	4,359.00	SF	0.50	0.50	100	1970	1970	3	50	1,090	

LAND DESCRIPTION

TOTAL OB/XF 1,090

LN	USE CODE	CLS	LAND USE DESCRIPTION	CAP	RD	LOC ZONE	FRONT	DEPTH	TOT LND UTS	UNIT TYPE	DT	DPTH FACT	% COND	TOT ADJ	UNIT PRICE	ADJ UNIT PRICE	LAND VALUE	OTHER ADJUSTMENTS AND NOTES	YEAR	DENSITY	DECL	FRZ	YR	CONSRV
1	000115	C	SFR ACRES	100	0004	OR	0.00	0.00	1.56	AC		1.00	1.00	0.90	30,000.00	27,000.00	42,120							

REVIEW DATE 01/06/2023 BY WWA Total Acres: 1.56 Total Land Value: 42,120 Market: 0 Agricultural: 0 Common: 42,120 PRINTED 08/06/2024 BY SYS