LOT 96
AMELIA CONCOURSE PH 3 UNIT B
OR 2365/1256

PIERATTI ALAN H & MARY
95175 CORNFLOWER DRIVE
FERNANDINA BEACH, FL 32034

2024

30-2N-28-0152-0096-0000

BUILDING CHARACTERISTICS

ELEMENT	CD	CONSTRUCTION
Exterior Wall	31	HARDIE BRD 100
Roof Structur	03	GABLE/HIP 100
Roof Cover	03	COMP SHNGL 100
Interior Wall	05	DRYWALL 100
Interior Floo	13	LVT/LAMNT 70
Interior Floo	14	CARPET 30
Air Condition	03	CENTRAL 100
Heating Type	04	AIR DUCTED 100
Bedrooms		4 100
Bathrooms		3 100
Frame	02	WOOD FRAME 100
Stories	2.	2. 100
Units		0 100
Occupancy	00	NONE 100
Quality	04	Quality Level 04

DOR CODE 0100 SINGLE FAMILY
MAP NUM | MKT AREA 04
NEIGHBORHOOD/LOC 4067.200

AREA TYPE	TOTAL GROSS AREA	PCT OF BASE	TOT ADJ AREA	SUBAREA MARKET VALUE
BAS	1,916	100	1,916	203,377
FGR	640	55	352	37,363
FOP	54	30	16	1,698
FSP	126	40	50	5,307
FUS	467	100	467	49,571
PTO	128	5	6	637
STR	37	10	4	425
TOTALS	3,368		2,811	298,378

MARKET ADJUSTMENTS

TYPE	MDL	EFF. AREA	TOT ADJ PTS	EFF. BASE RATE	REPL. COST NEW	AYB	EYB	ECON	FNCT		NORM	% COND
0100	01	2,811	112.2912	106.68	299,877	2021	2021	0	0	0	0.50	99.50

1 SINGLE FAM – 100% - 2023 Heated Area: 2383 HX Base Yr

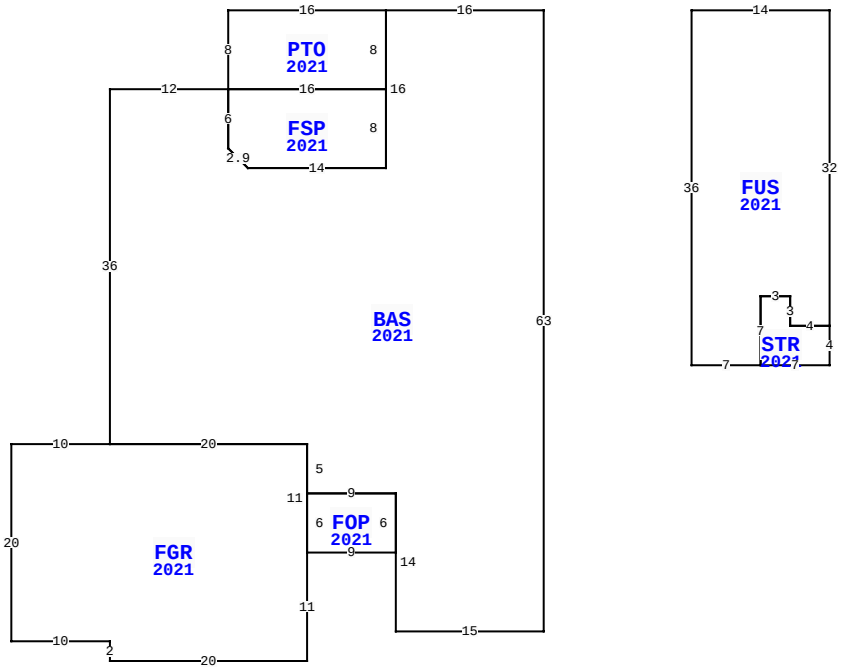

95175 CORNFLOWER DR, FERNANDINA BEACH

BLD DATE	03/03/2023 NW	LGL DATE	
XF DATE		LAND DATE	
INC DATE		AG DATE	

NASSAU COUNTY PROPERTY

PAGE 1 of 1 4

VALUATION SUMMARY

VALUATION BY		STANDARD
Tax Group: 4	Tax Dist:	
BUILDING MARKET VALUE		298,378
TOTAL MARKET OB/XF VALUE		21,271
TOTAL LAND VALUE - MARKET		75,000
TOTAL MARKET VALUE		394,649
SOH/AGL Deduction		1,800
ASSESSED VALUE		392,849
TOTAL EXEMPTION VALUE	13	392,849
BASE TAXABLE VALUE		0
TOTAL JUST VALUE		394,649
NCON VALUE		0
INCOME VALUE		
PREVIOUS YEAR MKT VALUE		381,407

PERMIT NUM	DESCRIPTION	AMT	ISSUED
C2010614	CO ISSUED	0	03/29/2021
B2010614	NEW CONSTR	328,450	11/03/2020

SALES DATA

OFF RECORD Number	DATE	TYPE INST	Q U	V I	RSN CD	SALE PRICE
2449/1079	3/30/2021	WD	Q	I	02	301,800
GRANTOR: DREAM FINDERS HOMES L						
GRANTEE: PIERATTI ALAN H & M						
2395/1495	9/25/2020	WD	U	V	30	840,000
GRANTOR: DFC AMELIA CONCOURSE						
GRANTEE: DREAM FINDERS HOMES						

BUILDING NOTES

BUILDING DIMENSIONS

BAS=[YR=2021] W16 PTO=[YR=2021] W16 S8 FSP=[YR=2021] S6 D2 R2 E14 N8 W16$ E16 N8$ S16 W14 L2 U2 N6 W12 S36 FGR=[YR=2021] W10 S20 E10 S2 E20 N11 FOP=[YR=2021] E9 N6 W9 S6$ N11 W20$ E20 S5 E9 S14 E15 N63$ PTR=E15 FUS=[YR=2021] E14 S32 STR=[YR=2021] S4 W7 N7 E3 S3 E4$ W4 N3 W3 S7 W7 N36$ W15$.

EXTRA FEATURES

LN	OB/XF CODE	DESCRIPTION	BLD	CAP	L	W	UNITS	UT	Adj R	ADJ UNIT PRICE	ORIG COND	YEAR ON	YEAR ACTUAL	Q	% COND	OB/XF MKT VALUE	NOTES
1	0500	FP-PRE FAB	0	100	0	0	1.00	UT	3,500.00	3,500.00	100	2021	2021	3	99	3,465	
2	0463	FENCE GATE	0	100	0	0	1.00	UT	300.00	300.00	100	2021	2021	3	98	294	
3	0855	CONC PAVER	0	100	0	0	1,038.00	SF	10.00	10.00	100	2021	2021	3	99	10,276	
4	0476	VF 6 SBPL	0	100	0	0	132.00	LF	32.00	32.00	100	2021	2021	3	98	4,140	
5	0470	VNYL GATE	0	100	0	0	2.00	UT	300.00	300.00	100	2021	2021	3	98	588	
6	0462	ST/AL FNC	0	100	66	0	264.00	SF	10.00	10.00	100	2021	2021	3	95	2,508	

LAND DESCRIPTION

TOTAL OB/XF 21,271

LN	USE CODE	CLS	LAND USE DESCRIPTION	CAP	RD	LOC ZONE	FRONT	DEPTH	TOT LND UTS	UNIT TYPE	DT	DPTH FACT	% COND	TOT ADJ	UNIT PRICE	ADJ UNIT PRICE	LAND VALUE	OTHER ADJUSTMENTS AND NOTES	YEAR	DENSITY	DECL	FRZ	YR	CONSRV
1	000134	C	SFR POND	100		RSF-2	0.00	0.00	1.00	LT		1.00	1.00	1.00	75,000.00	75,000.00	75,000							

REVIEW DATE 09/10/2021 BY JH Total Acres: 0.00 Total Land Value: 75,000 Market: 0 Agricultural: 0 Common: 75,000 PRINTED 08/06/2024 BY SYS